PHILCO
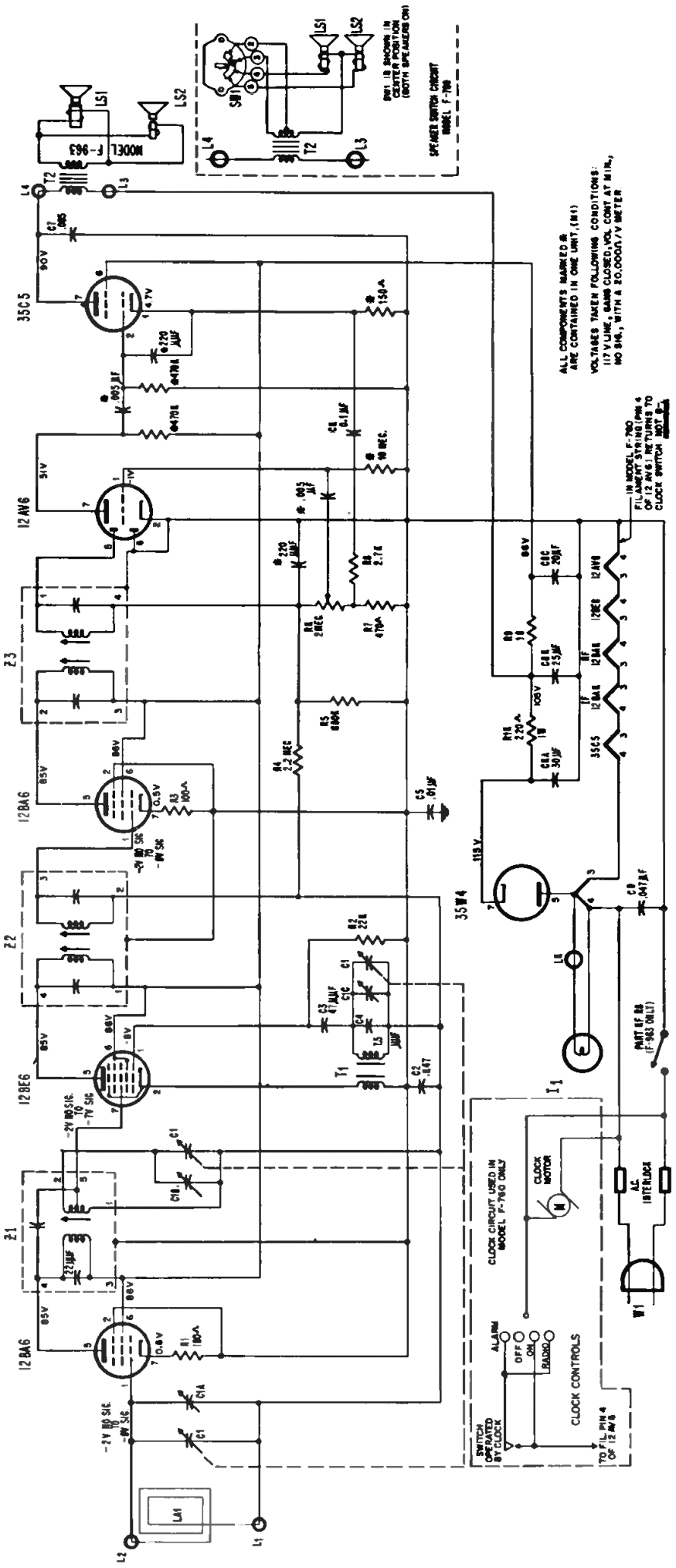
MODELS F-760 and F-963