MOTOROLA

CHASSIS
HS-598

MODELS
2F21B
2F21R

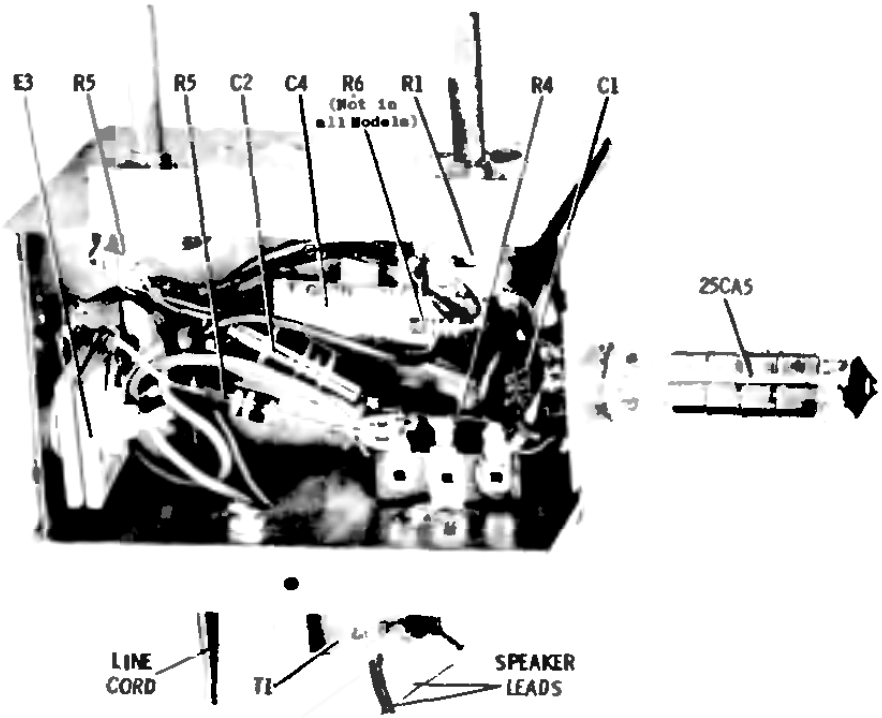

PARTS LOCATION

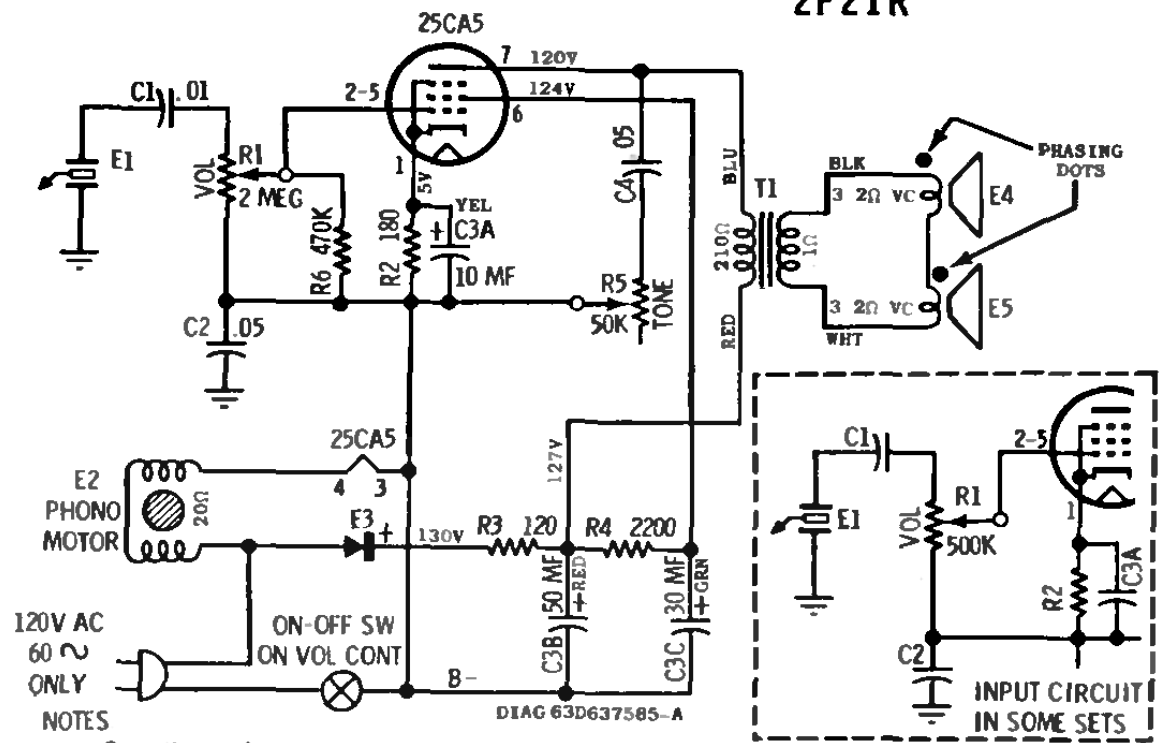

NOTES

Capacitors - decimal values in MF all others in MMF unless otherwise specified.

Voltages - measured from point indicated to B— with a VTVM.

SPEAKER PHASING

NOTE: THE SPEAKERS MUST BE PHASED OR A LOSS OF THE LOW FREQUENCIES WILL RESULT

Phasing can be checked by momentarily connecting a 1-1/2 volt flashlight cell in parallel with the output transformer secondary and noting that the cones of all speakers move in the same direction. If they do not, reverse the connections of one speaker.

DISASSEMBLY INSTRUCTIONS

To Remove Chassis from Cabinet

1. Pull off two knobs from front of cabinet.
2. Remove four (4) phono mounting board and two (2) baffle retainer screws.
3. Lift rear of phono mounting board slightly and slide out.
4. Remove two screws which hold chassis to mounting board and remove chassis.

To Remove Turntable

1. Remove "C" washer from spindle.
2. Remove turntable by pulling up - off of spindle.