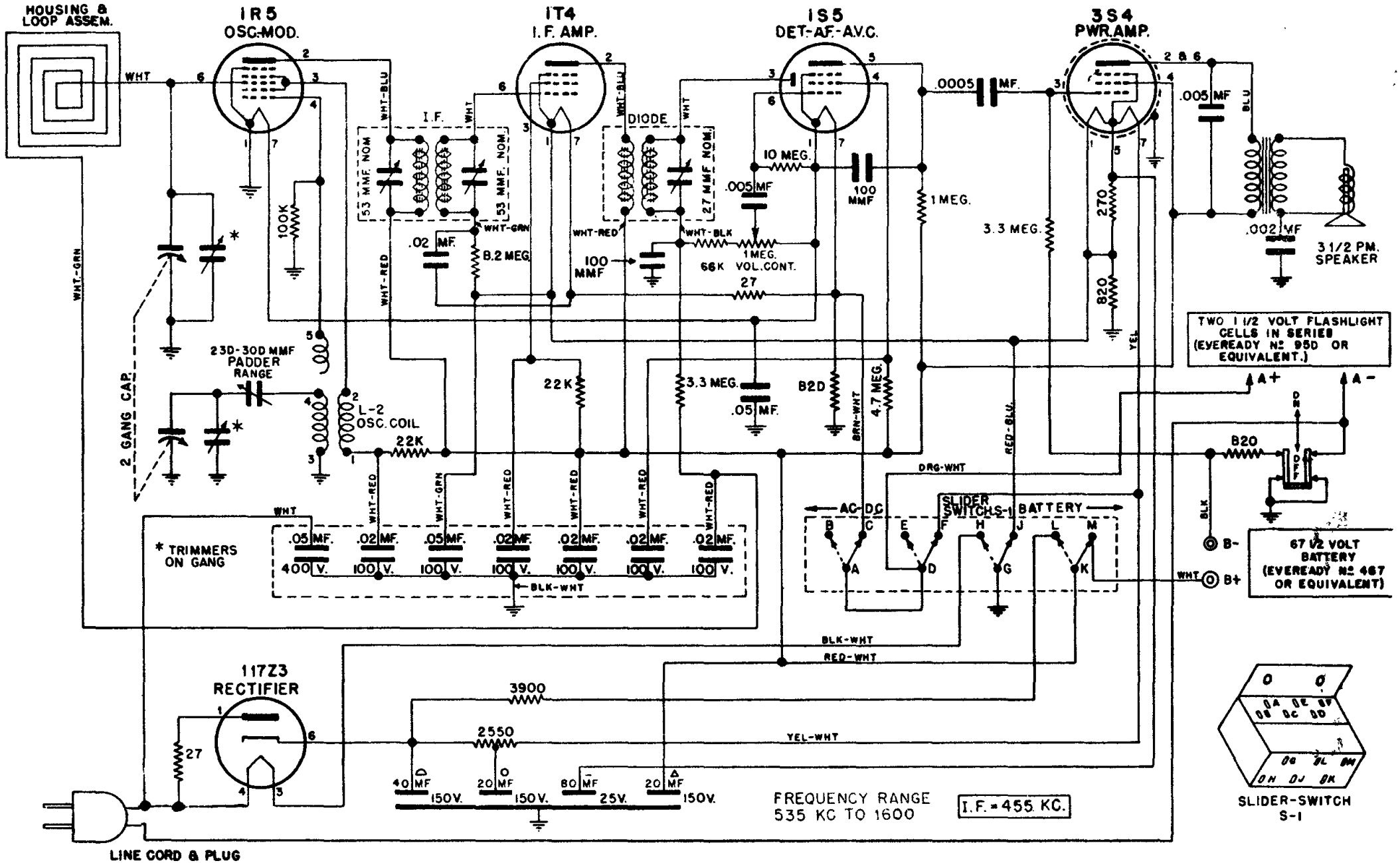

Galvin Mfg. Co.
MOTOROLA

"A" BATTERY DRAIN = 150 MA AT 2.8 VOLTS.
"B" BATTERY DRAIN = 9.2 MA AT 67.5 VOLTS.
⏚ = RECEIVER CHASSIS.
POWER SUPPLY CHASSIS FLOATING.

MODEL 5A5 SCHEMATIC DIAGRAM
(CHASSIS HS-15)