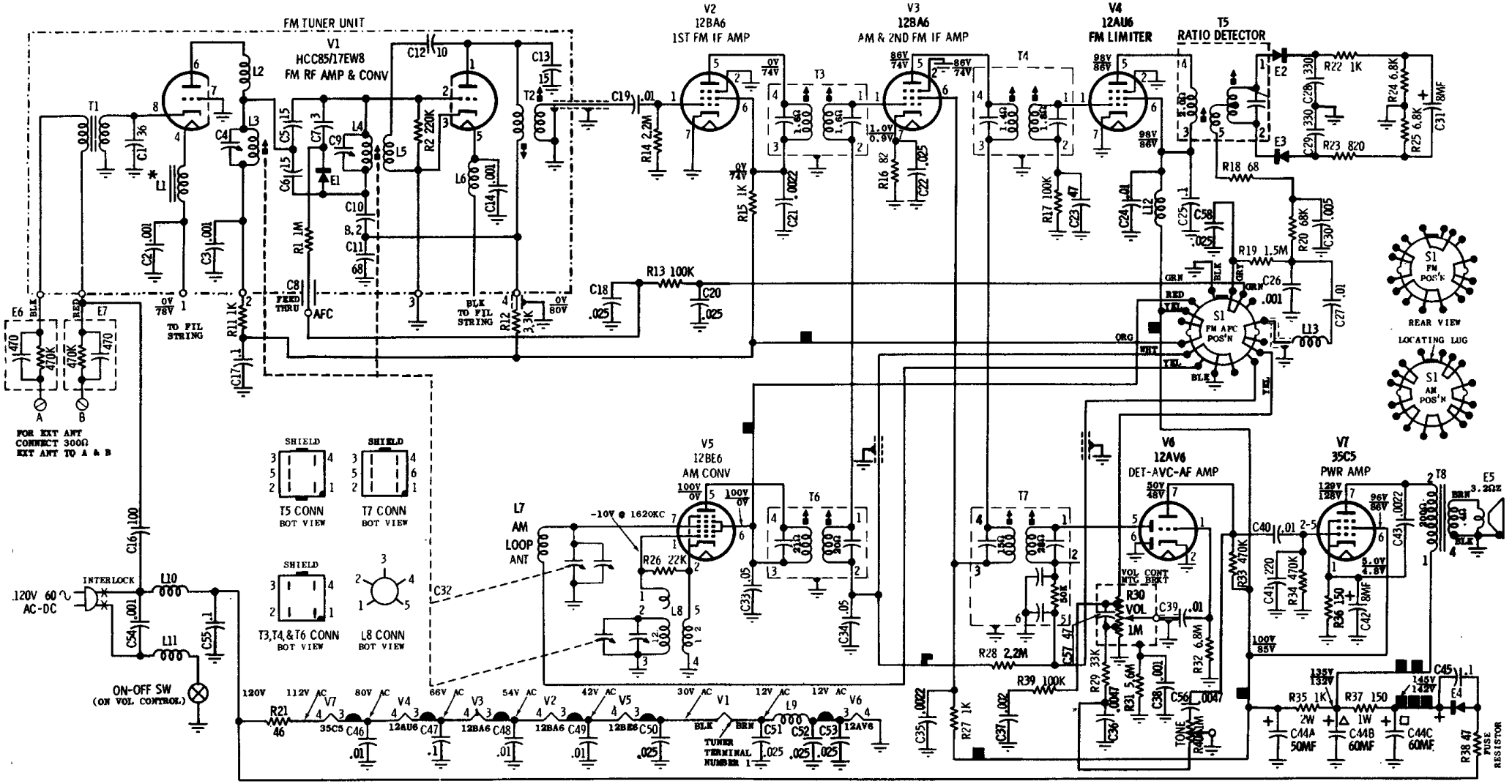

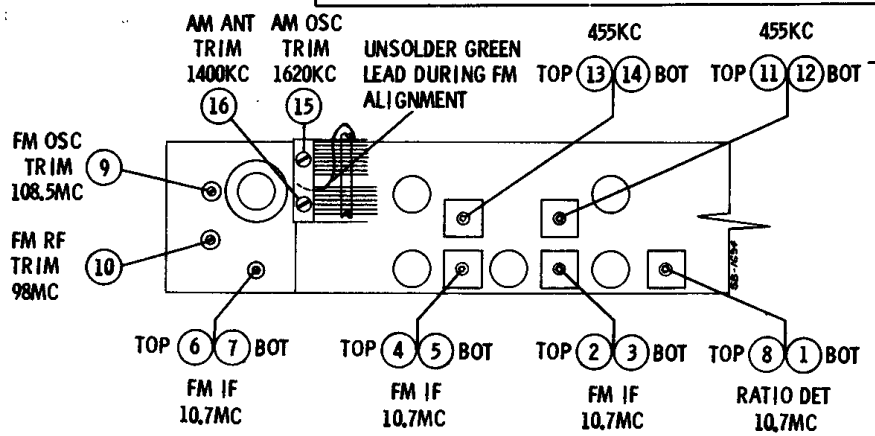

ALIGNMENT LOCATIONS

PLATED CHASSIS BOARD WIRING LEGEND
= B+ = AVC = FIL
NOT IN ALL SETS

V TAKEN WITH S1 IN AM POSITION
V TAKEN WITH S1 IN FM POSITION

NOTES:
CAPACITORS - UNLESS OTHERWISE SPECIFIED, DECIMAL VALUES IN MF; ALL OTHERS IN MMF.
VOLTAGES - MEASURED FROM POINT INDICATED TO B- WITH A VTVM ± 10% NO SIGNAL INPUT. WITH 120V 60∿ AC INPUT

TUNING RANGE - AM - 535 KC TO 1620 KC. IF - 455 KC
FM - 88 MC TO 108 MC. IF - 10.7MC

⏚ = B-

MOTOROLA

CHASSIS HS-4109

MODELS B9,B10

Chassis HS-4108, Model B7,
Chassis HS-4123, Model B8,
are similar to HS-4109.