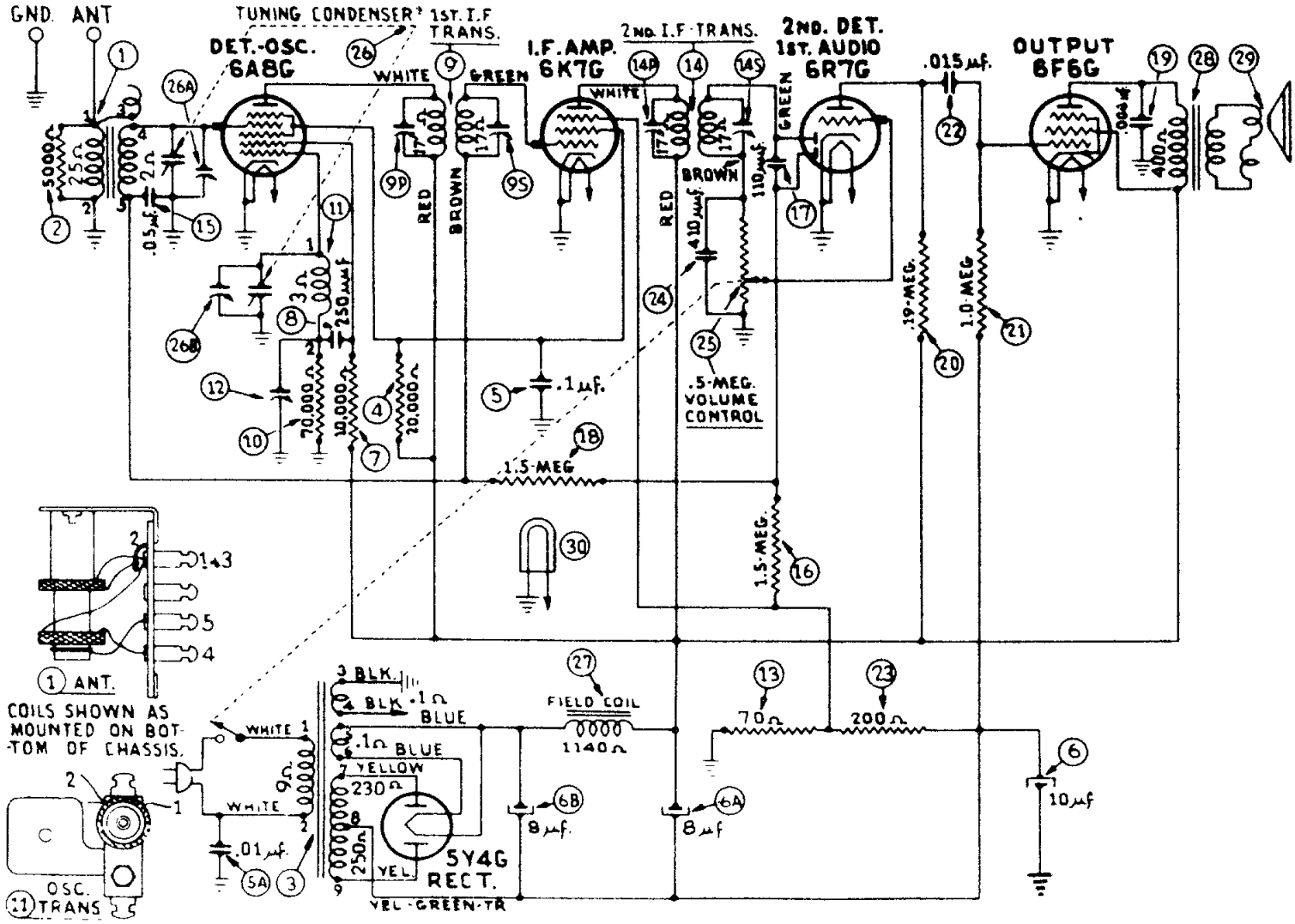

Schematic Diagram, Model 37-93

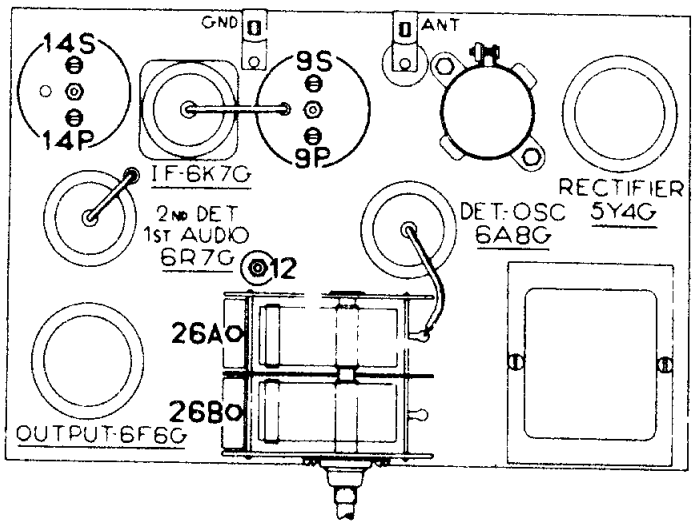

Locations of R. F. and I. F. Compensators

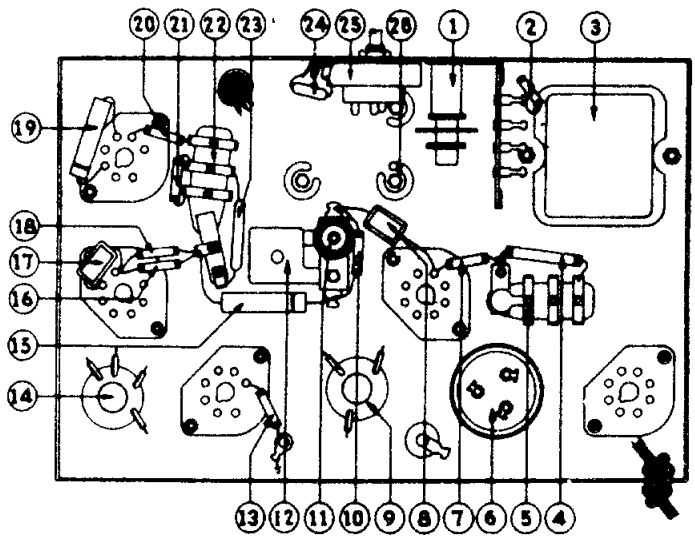

Part Locations, underside of Chassis

Philco Model 37-93 I.F. 470 KC.