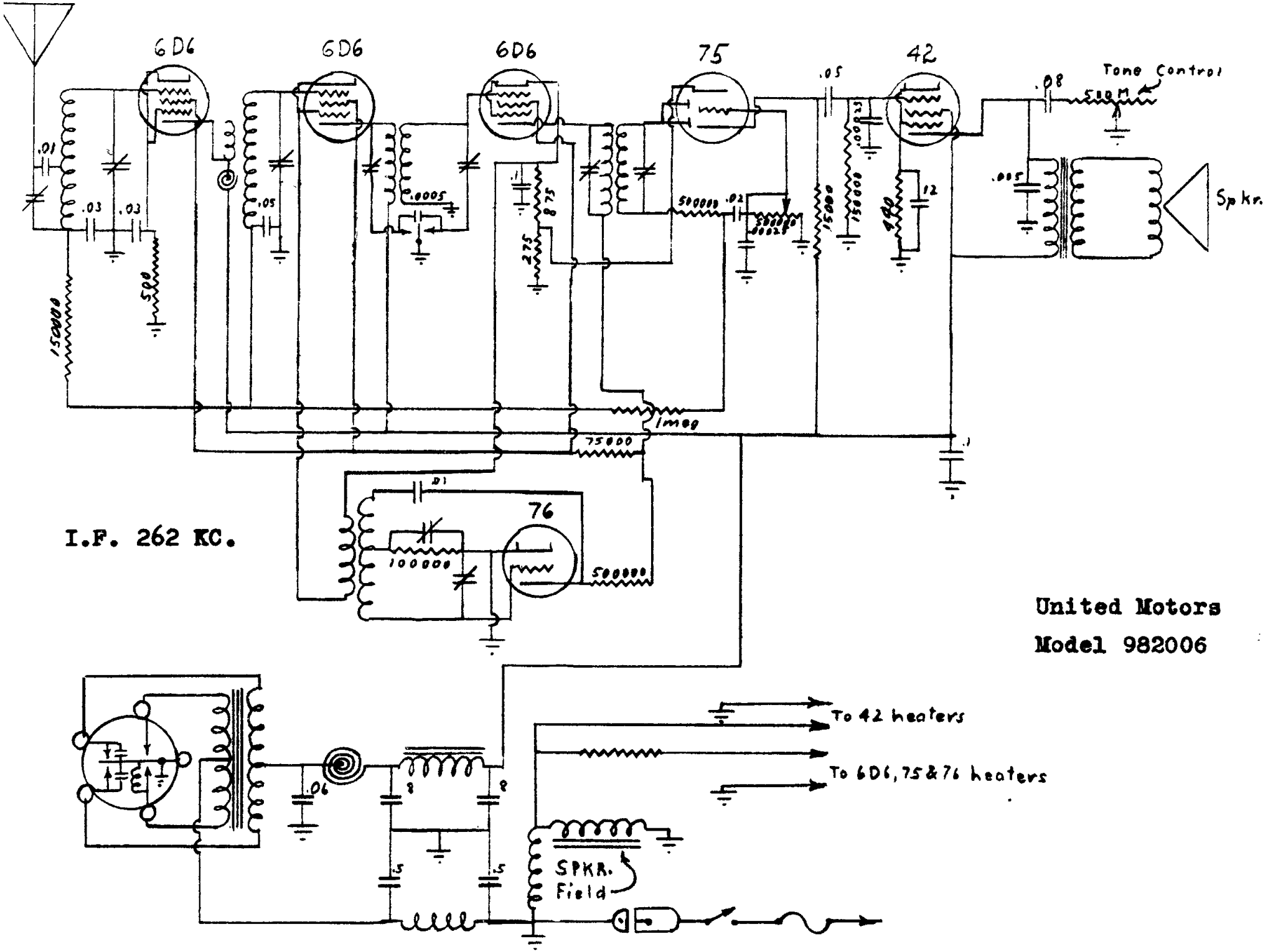

United Motors
Model 982006