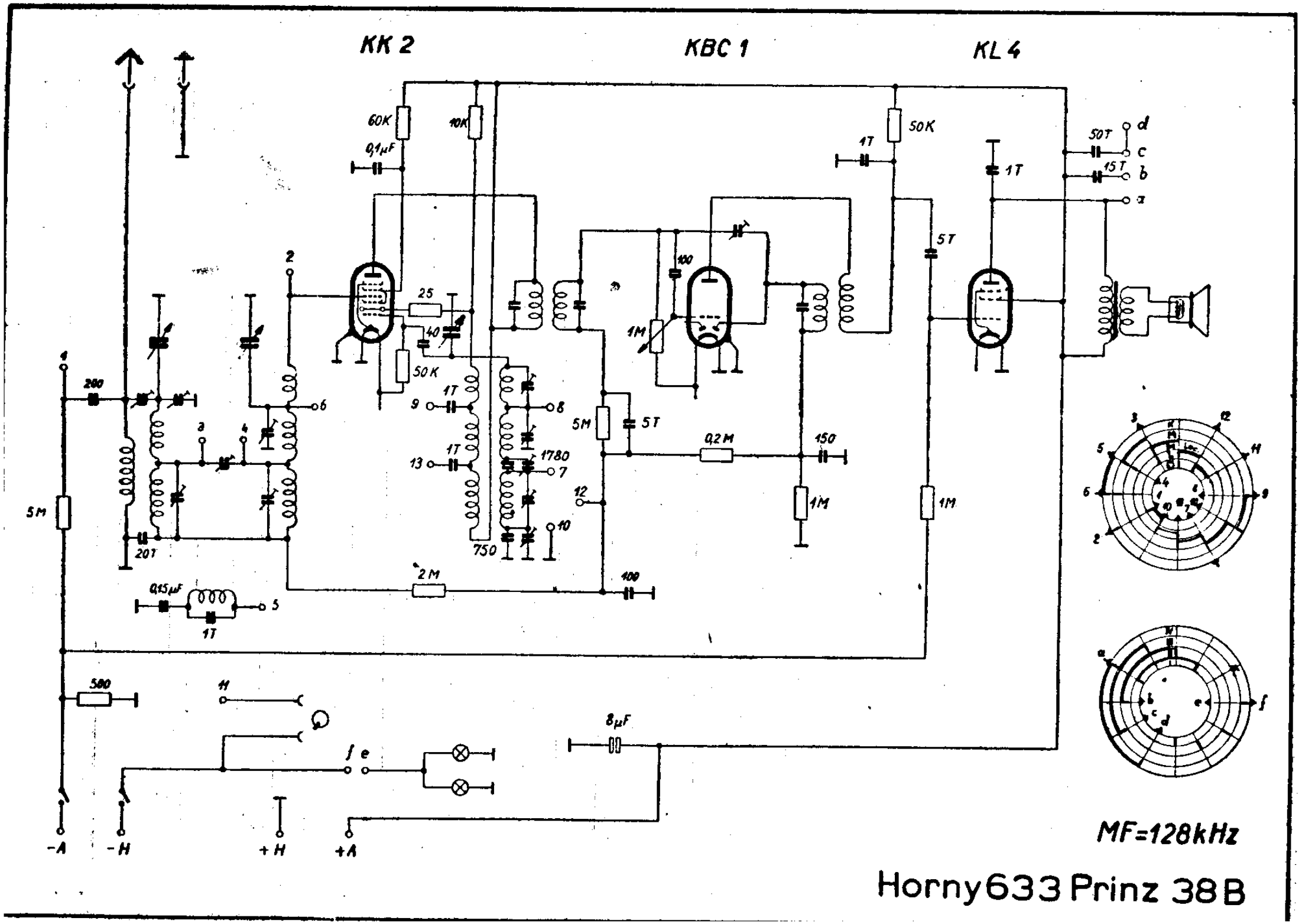
KK 2
KBC 1
KL 4
60K
10K
0,1µF
50K
1T
50T
15T
d
c
b
a
5T
100
1M
25
40
50K
1T
9
8
1T
13
1780
7
750
10
5M
5T
0,2M
150
12
1M
1M
200
20T
2M
100
0,15µF
1T
5
5M
500
11
8µF
f e
-A
-H
+H
+A
MF=128kHz
Horny633 Prinz 38B