OLYMPIC RADIO & TELEVISION INC.

OLYMPIC RADIO
MODEL 441

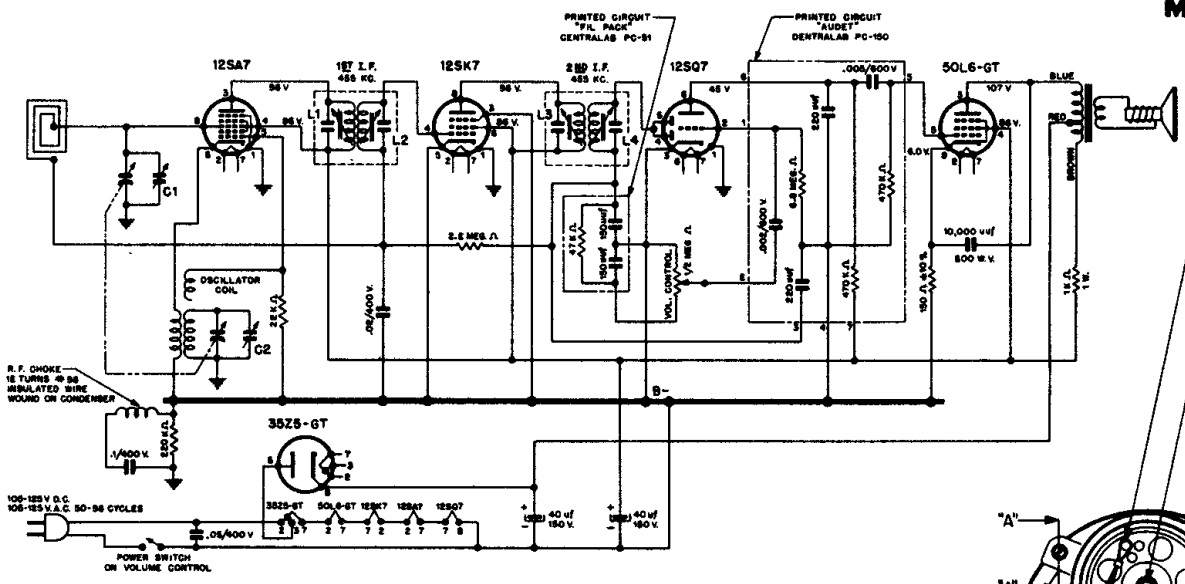

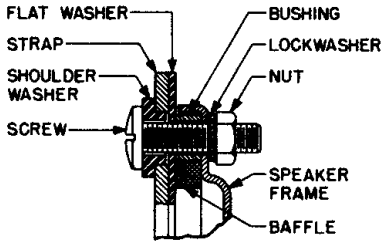

ENLARGED SECTION VIEW THRU "A-A" SHOWING DIAL SHAFT STRAP ASSEMBLY, MOUNTED TO SPEAKER.

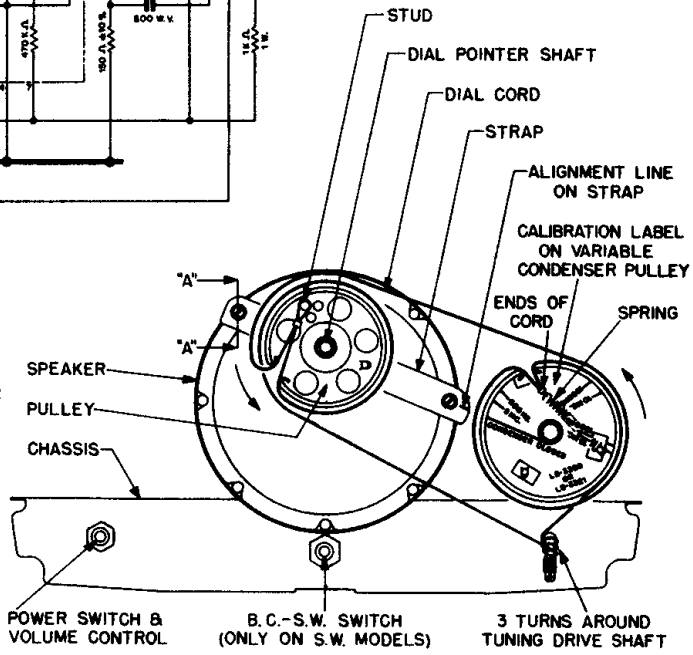

FRONT VIEW OF CHASSIS SHOWING STRINGING OF DIAL CORD WITH VARIABLE CONDENSER FULLY CLOSED.

LEGEND:
CHASSIS GROUND

NOTES:
1. ALL RESISTORS ±50% TOLERANCE, 1/2 WATT, UNLESS OTHERWISE SPECIFIED.
2. ALL MICA CONDENSERS ±20% TOLERANCE.
3. ALL VOLTAGES MEASURED BETWEEN POINTS INDICATED AND B-, WITH VOLUME CONTROL FULL ON, USING 20,000 OHM-PER-VOLT METER. ALL VOLTAGE READINGS ±10%, MEASURED WITH INPUT VOLTAGE OF 117 V., 60 CYCLES A.C.

ALIGNMENT INSTRUCTIONS:

The chassis must be removed from the cabinet before alignment can be performed. Before removing chassis pull off dial pointer and the two knobs at the front of the cabinet. At the rear of the cabinet, remove the two screws at the lower right and left hand corners of the chassis apron; these screws are accessible through the notched corners of the antenna loop back. Also remove the screws holding the upper right and left hand corners of the antenna loop back to the cabinet. The chassis can then be easily removed.

Equipment required: Modulated RF signal generator; output meter; insulated screw-driver. two .1 mfd 400 volt condensers.

To insure proper alignment, a radiated signal will be required during part of the alignment procedure. To radiate a signal, connect a loop of about 6 inches in diameter (one turn of #14 or #12 wire) across the output of the signal generator, and place this loop parallel to the loop of the receiver to be aligned, at a distance of about 10 or 12 inches.

A calibration chart is provided on the variable condenser pulley for convenience in setting the variable condenser to the alignment frequencies. These markings are referenced against the line stamped on the dial pulley mounting strap.

Connect the output meter and signal generator as follows:

Output meter: Connect across the speaker voice coil and turn the volume control to maximum (extreme clockwise position).

Signal generator: When the generator is not used to radiate a signal, connect the low side to the receiver chassis through a .1 mfd condenser, clip the high side to the point at which signal injection is required, and keep the output as low as possible. Proceed in the sequence shown in the alignment chart.

When the alignment process is completed, turn the tuning knob shaft until the tuning condenser plates are fully meshed. Replace the chassis inside the cabinet, insert and tighten the screws previously removed, and assemble the two knobs on their shafts at the front panel. With the condenser plate fully meshed place the dial pointer on its shaft so that it points directly to the horizontal line at the "55" end of the dial.

ALIGNMENT PROCEDURE CHART
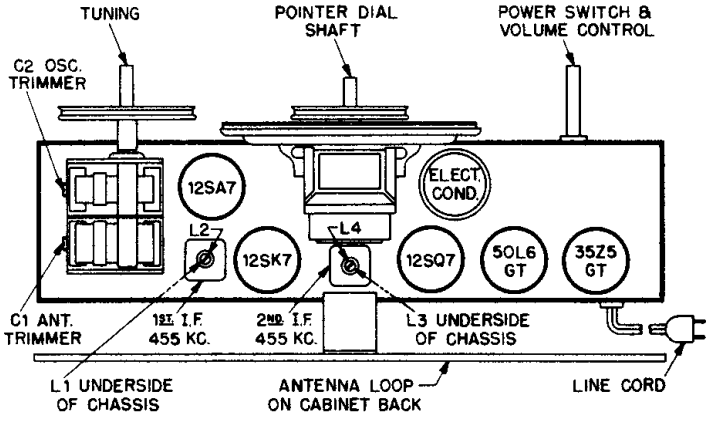
STEP	CONNECT HIGH SIDE OF SIGNAL GENERATOR TO-	SET SIGNAL GENERATOR TO-	TURN RECEIVER DIAL TO-	ADJUST THE FOLLOWING FOR MAXIMUM OUTPUT. (KEEP SIGNAL FROM SIGNAL GENERATOR AS LOW AS POSSIBLE.)
1	ANTENNA SECTION TUNING CONDENSER IN SERIES WITH .1 MFD. COND.	455 KC.	FULL CLOCKWISE POSITION. (CONDENSER PLATES FULLY OPEN)	L4, L3, L2, L1 AND REPEAT IN SAME ORDER (1st AND 2nd. I.F. TRANSFORMERS)
2	USE RADIATED SIGNAL	1500 KC.	1500 KC. ON CALIBRATION LABEL (150 ON DIAL)	C2 (OSCILLATOR TRIMMER)
3		1500 KC	MAXIMUM SIGNAL APPROX. 1500 ON CALIBRATION LABEL (150 ON DIAL)	C1 (ANTENNA TRIMMER)
4		REPEAT STEPS 2 AND 3