MOTOROLA

MODELS	CHASSIS
2F12N	HS-667
2F12W	HS-667

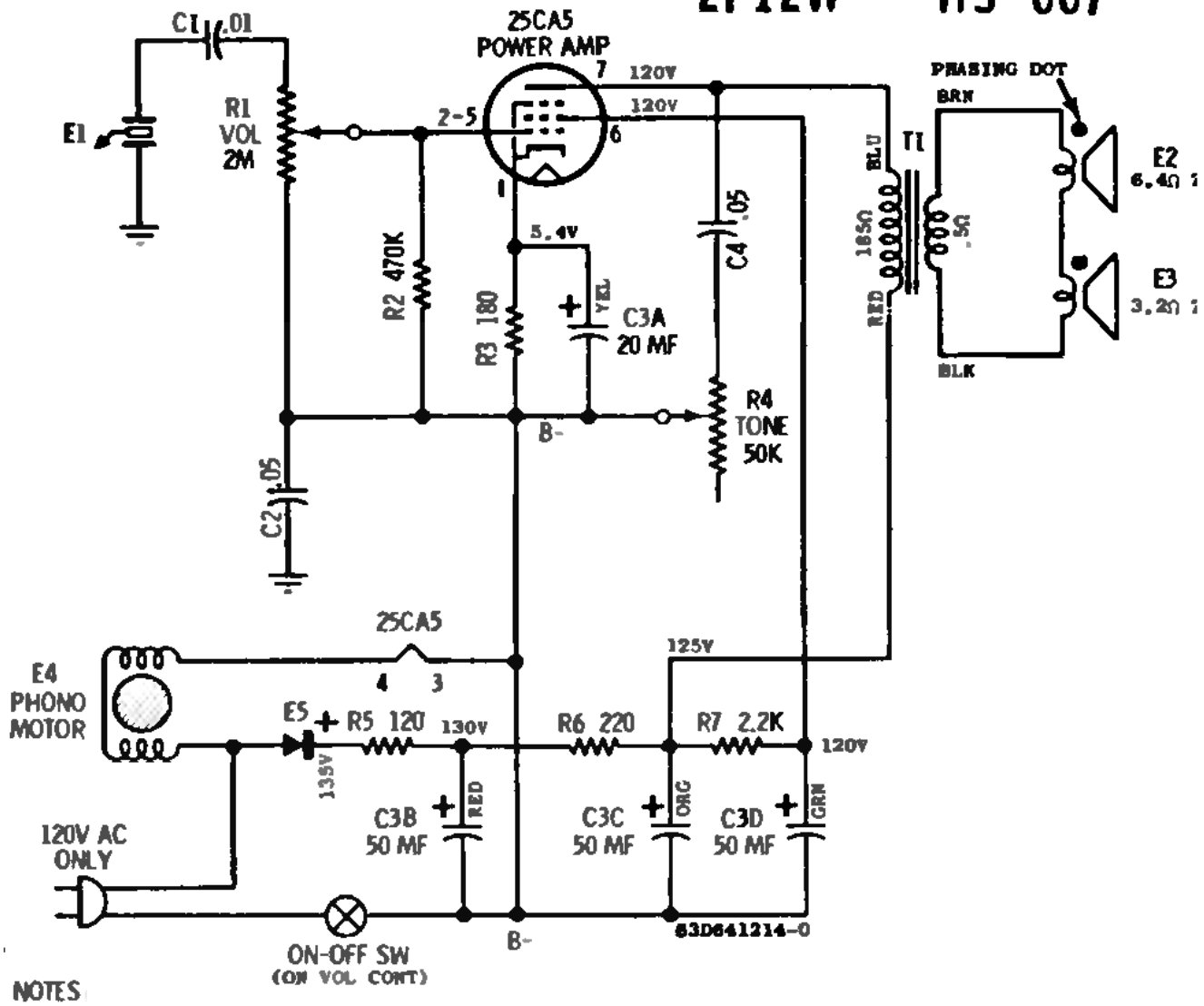

NOTES

CAPACITORS - Decimal values in MF, all others in MMF unless otherwise specified.
VOLTAGES - Measured from point indicated to B- with a VTVM. ⏚ = CHASSIS

DISASSEMBLY INSTRUCTIONS

To Remove Chassis from Cabinet

1. Pull off two knobs from front of cabinet.
2. Remove four (4) motorboard and three (3) baffle retainer screws.
3. Remove baffle.
4. Lift rear of motorboard slightly and slide out.
5. Remove two screws which hold chassis to motorboard and remove chassis.

To Remove Turntable

1. Remove "C" washer from spindle.
2. Remove turntable by pulling up - off of spindle.