MOTOROLA

MODELS	CHASSIS
2F11B	HS-666
2F11R	HS-666

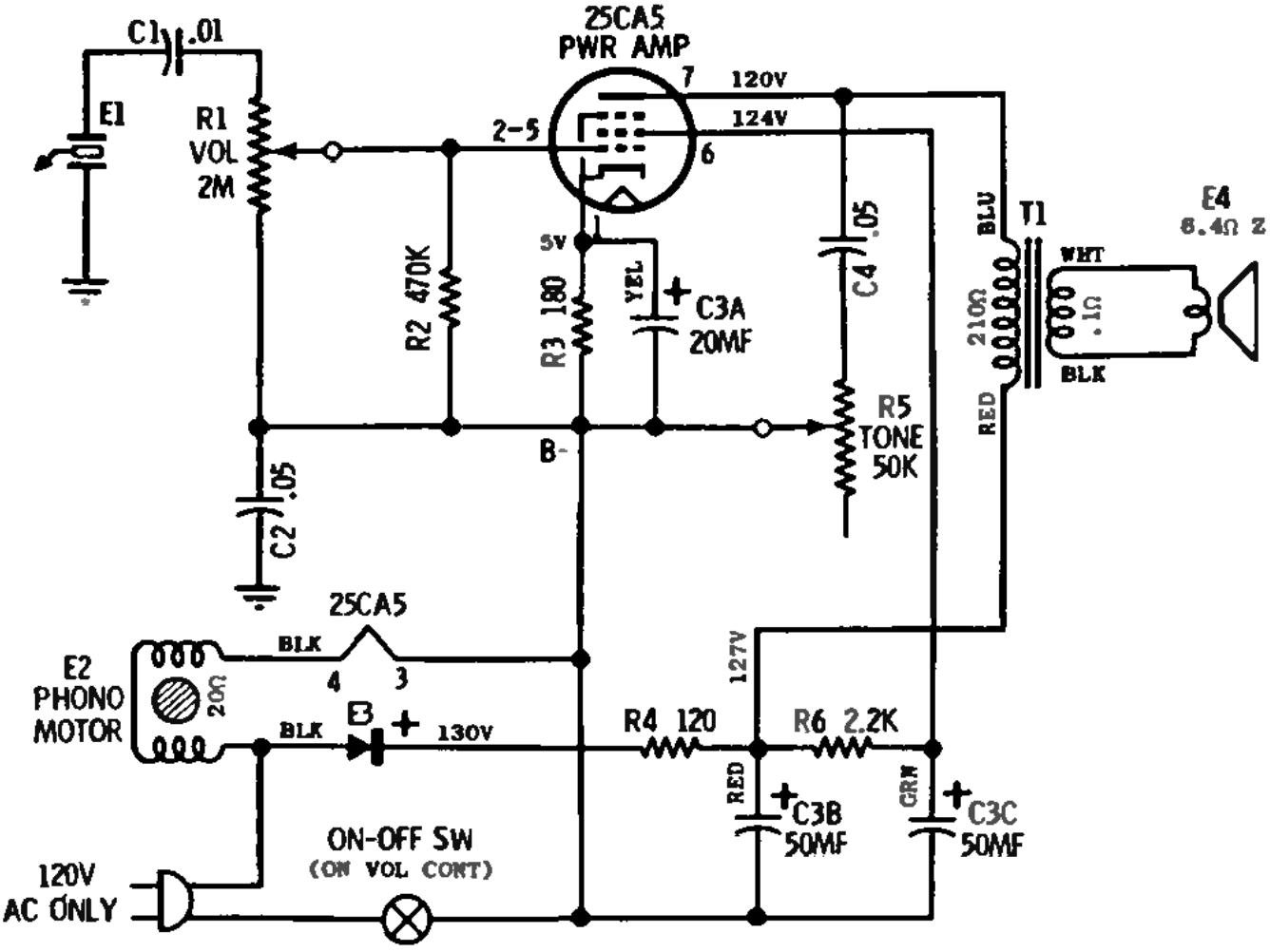

NOTES:

CAPACITORS - Decimal values in MF, all others in MMF unless otherwise specified.

VOLTAGES - Measured from point indicated to B- with a VTVM.
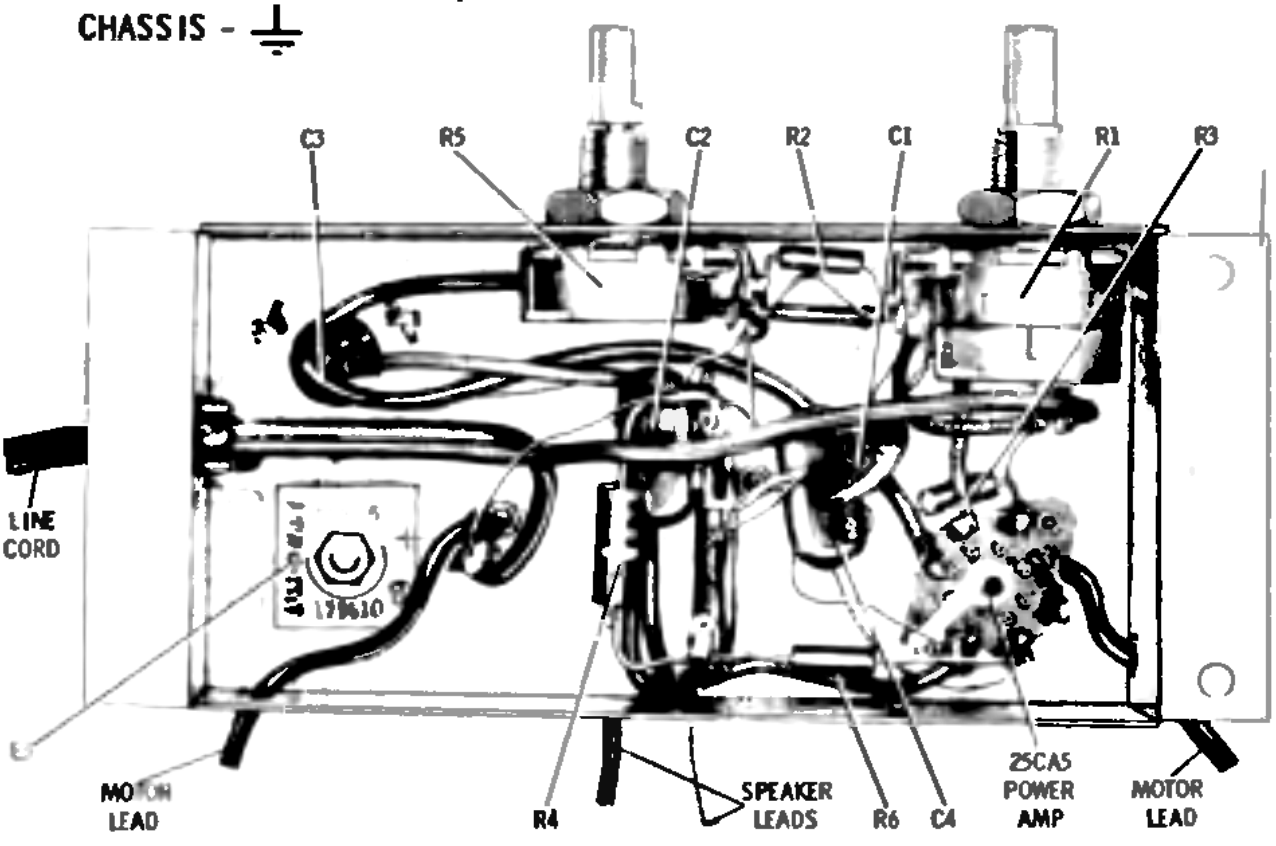
CHASSIS - ⏚