MONTGOMERY-WARD & CO.

MODEL 1355 (62-1955)
Minstrel
Schematic
Voltage

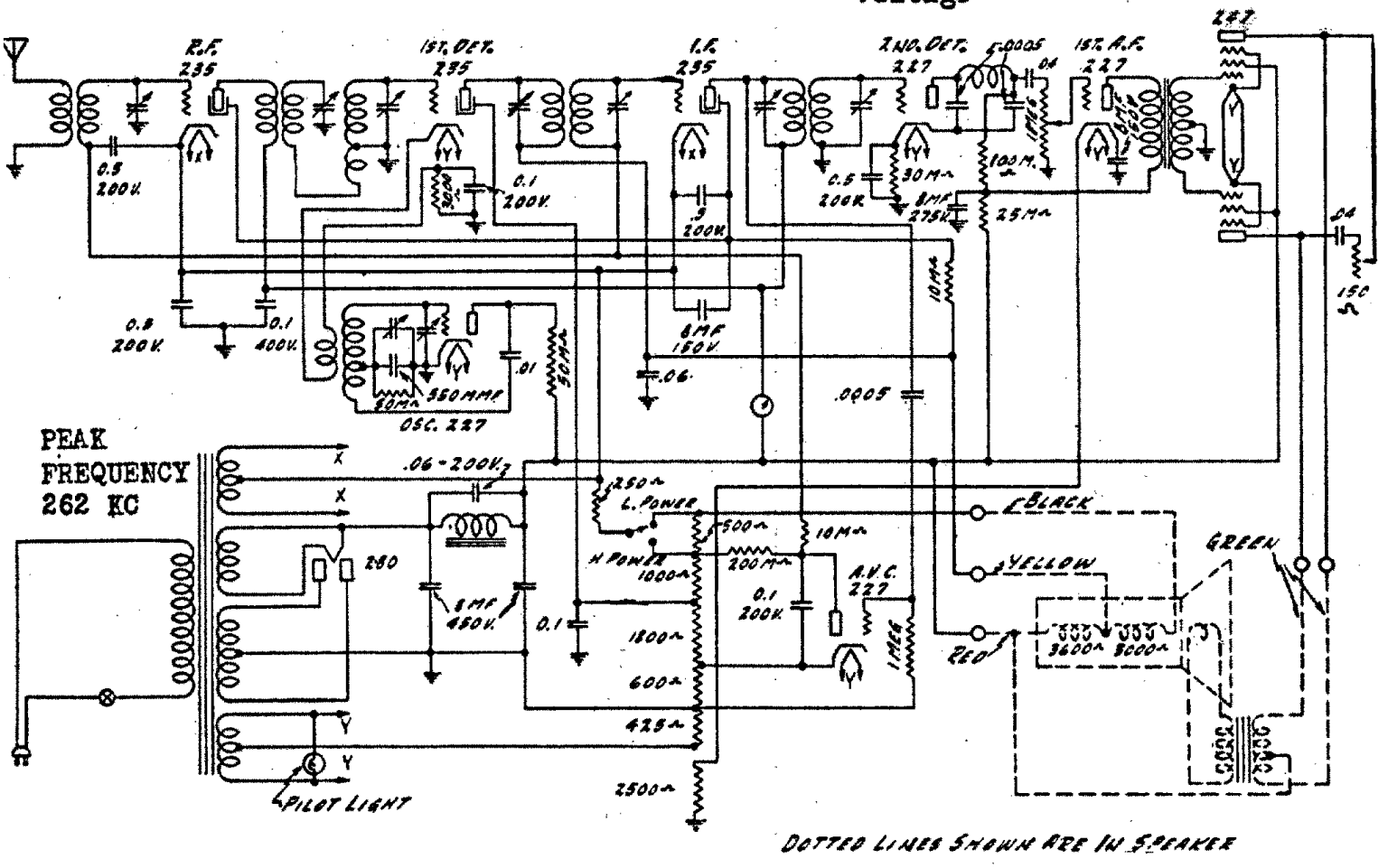

1955 AND 1355 CHASSIS—VOLTAGES AT SOCKETS —LINE VOLTAGE 115 VOLUME CONTROL AT MAXIMUM—POWER LEVEL SWITCH HIGH POWER

Type of Tube	Position of Tube	Function	"A" Volts	"B" Volts	Contro Grid "C" Volts	Screen Volts	Screen Current MA	Cathode Volts	Plate MA	Grid Test MA
235	1	R.F.	2.3	175	2.3(1)	65	.7	0.	4.	6.
235	2	1st Det.	2.3	185	7.0	69	.4	14.	2.0	2.6
235	3	I.F.	2.3	175	2.3(1)	65	.7	0.	4.0	6.0
227	4	2nd Det.	2.3	115	12.			7.5	.4	.5
227	5	1st Audic	2.3	145	11.(1)			10.	4.6	5.4
227	6	Osc.	2.3	83	15—35(3)			21.	4.2	4.4
227	7	A.V.C.	2.3	89(4)	20.(5)			1.5	0.	0.
247	8	Power	2.35	255	18.5	265	4.5			
247	9	Power	2.35	255	18.5	265	4.5		21.	28.
280	10	Rect.	4.9						45.	

(1) Measured across 250 ohm series resistor.
(2) Measured across 2500 ohm series resistor.
(3) Bias voltage varies from 15 to 35 between 1500 and 530 K.C. settings of tuning condenser.
(4) Measured across 1000 and 1800 ohm section of shunt resistor.
(5) Measured across 600 ohm section of shunt resistor.

Voltages

Check the voltages at the sockets to see if the power system is delivering the correct voltages. The antenna and ground should be disconnected. The tube shield should be on. The tester plug can be inserted in the sockets and the shield placed over it. When the plug is inserted in the 235 tube sockets care must be taken that the grid connection is not shorted to the tube shield. The chart shows the voltages and currents with all tubes in, speaker connected and set in operating condition.

In reading the I. F. voltages at the socket with a set analyzer some difficulty may be encountered if the control grid lead is in the same cable as the rest of the leads to the socket plug. If this is the case the grid plate capacity caused by the grid and plate leads being in the same cable results in a feed back which causes an I. F. oscillation. This manifests itself as a blocking or motorboating.

25 Cycle Chassis No. 1355X

For 25 cycle sets remove the .06 Mfd. condenser across the filter choke and use No. U-3169 power transformer instead of No. U-2912.