MODEL 62-070
Princess
62-060
Challenger Jr.
(1800)

MONTGOMERY-WARD & CO.

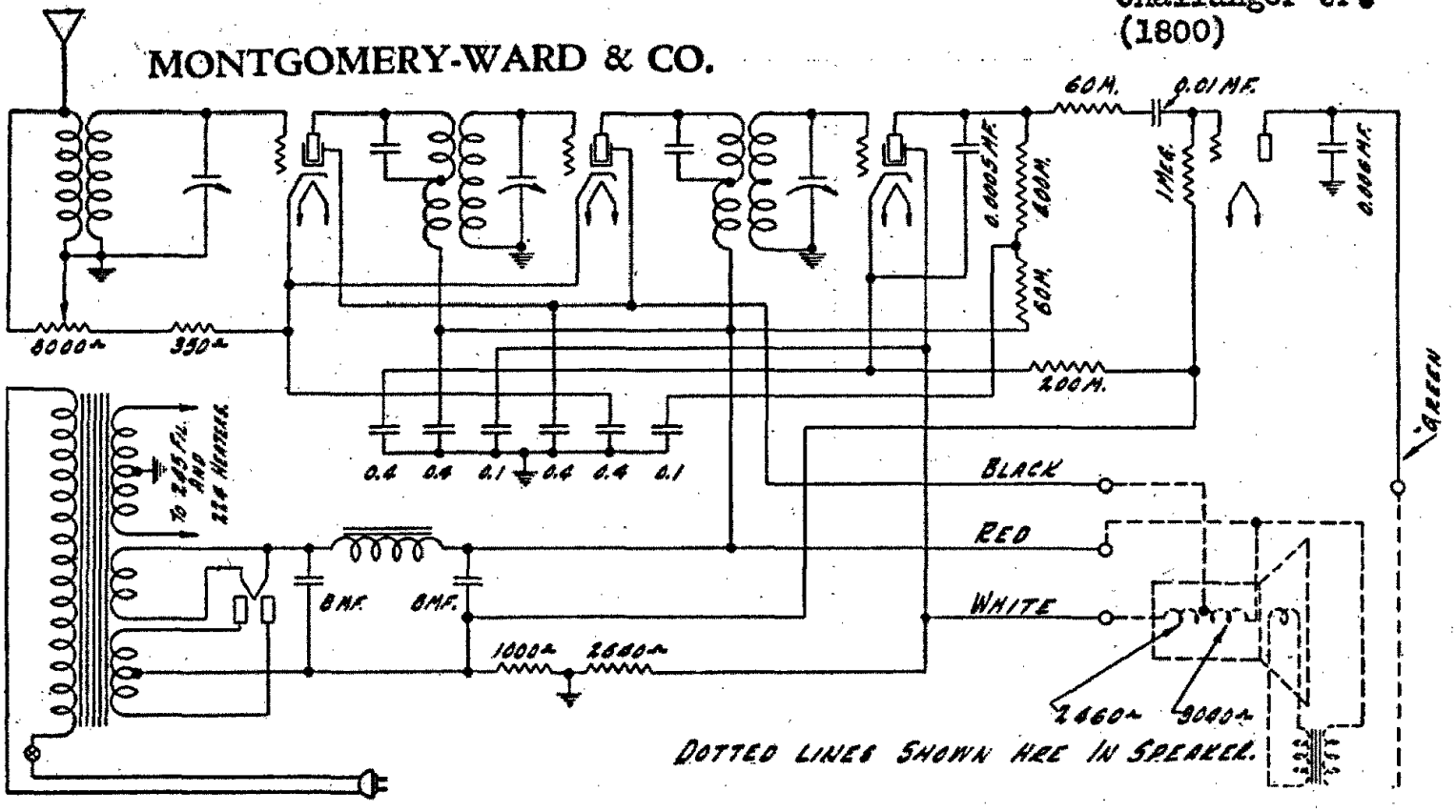

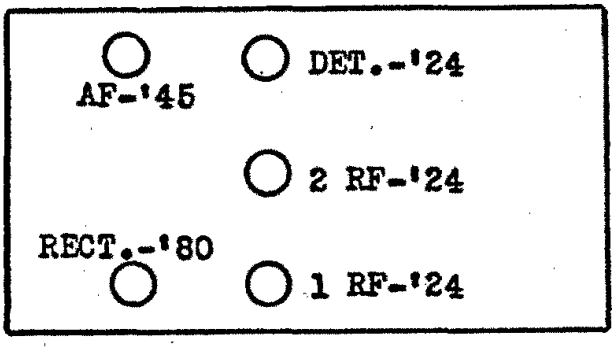

NO. 26 W CHASSIS—VOLTAGES AT SOCKETS—VOLUME CONTROL AT MAXIMUM—LINE VOLTAGE, 115—PLUG IN SOCKET OF RECEIVER—TUBE IN TEST SET

Type of Tube	Position Tube	Function	"A" Volts	"B" Volts	Control Grid "C" Volts	Screen Volts	Screen Current MA	Cathode Volts	Plate MA	Grid Test MA
224	1	1st Radio	2.2	245	2.5	80	.6	2.5	2.9	5.1
224	2	2nd Radio	2.2	245	2.5	80	.6	2.5	2.9	5.1
224	3	Detector	2.2	130	3.	40	.1	3.	.25	.4
245	4	Audio	2.35	245	50.				28.	31.
280	5	Rectifier	4.6						25.	
									iPer Plate	

General Description

The Model 26W chassis used in both the Princess and Challenger, Jr., is similar in many respects to the 32W chassis used in the Troubadour. The operating voltages, however, will be found to be different, and also this chassis does not use the band pass filter input circuit, as used in the 32W. Only one 245 tube is used in this chassis, and only one stage of resistance coupled audio.

The speaker is of a new type using a center tap field. The entire field winding being used as a shunt resistor. The center tap supplies the screen grid voltage to the radio frequency tubes. Only two electrolytic filter condensers are used, and a number of the small bypass condensers are eliminated, as shown in the schematic diagram, Figure I.

The general service procedure as described for the Model 32 W chassis can be used in servicing the 26W chassis.

AIRLINE 5 TUBE S.G.

"Princess" No 62-070
and
"Challenger Jr." No 62-060
(Cat. No 1800)

60 ∿ CHASSIS No 26-W
25 ∿ " No 26-WX

NOTE: For 25 Cycle Sets use No. 2281 Power Transformer instead of No. 2251