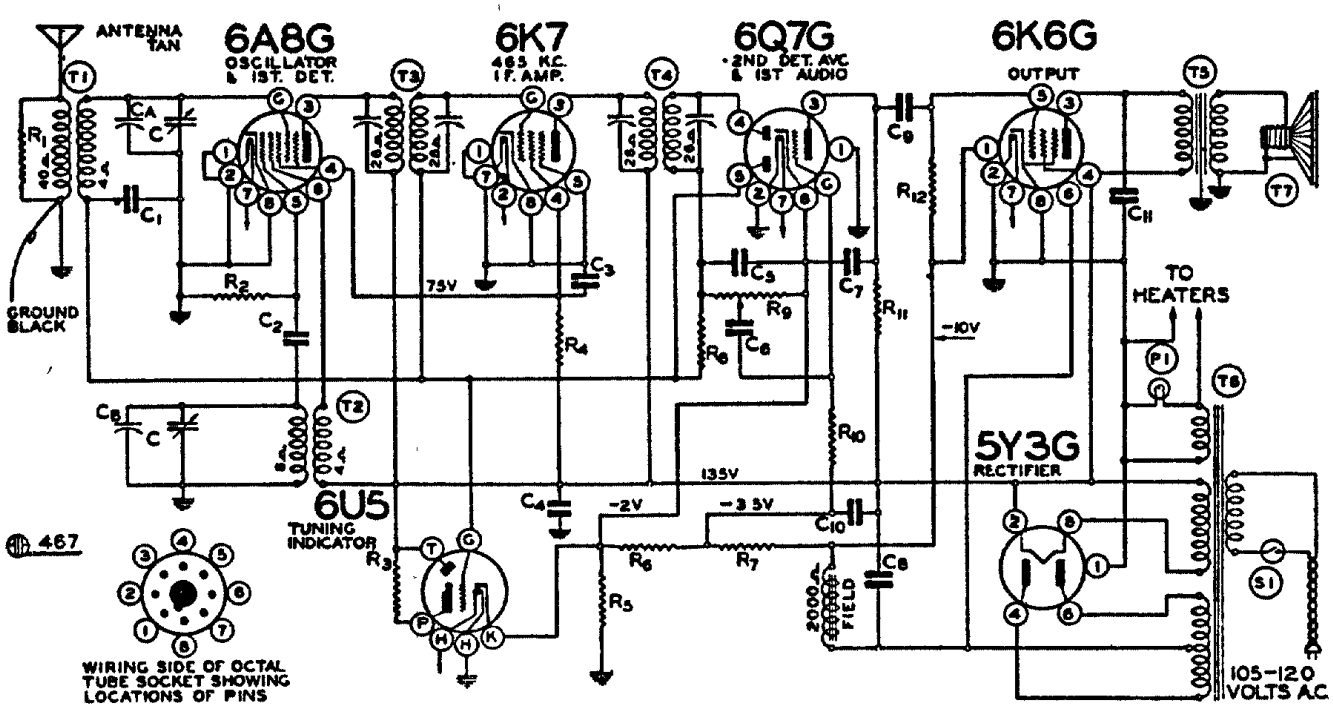


## LIST OF REPAIR PARTS (Serial No. 107300 and up)

**USE ONLY GENUINE FACTORY REPLACEMENT PARTS**

| Bin No. | Part No. | schematic reference | Description | No. Used in set | Selling price each |
|---|---|---|---|---|---|
| | | | **CONDENSERS** | | |
| 10979 | BE100-1 | C3 | .1x400 volt Tubular | 1 | .10 |
| 1387 | BE100-9 | C1 | .05x200 volt Tubular | 1 | .10 |
| 1256 | BE100-11 | C6,C9 | .01x400 volt Tubular | 2 | .09 |
| | BE100-13 | C4 | .05 x 400 Volt Tubular | 1 | .10 |
| 10925 | BE100-19 | C11 | .006x600 volt Tubular | 1 | .09 |
| | BE119-47B | C8,C10 | 5 Mfd. x 200 w.v.; 5 Mfd. x 250 w.v. Electrolytic Filter | 1 | .70 |
| 0930 | BE129-2 | C7 | .0005 Mica — Type — 20% | 1 | .09 |
| 11335 | BE129-5 | C5 | .0001 Mica — Type — 20% | 1 | .09 |
| 10928 | BE129-12 | C2 | .00025 Mica — Type — 20% | 1 | .10 |
| | | | **RESISTORS** | | |
| | BE106-35 | R5,R6,R7 | 65 Ohm, 45 Ohm, 220 Ohm metal Clad Resistor | 1 | .20 |
| 1097 | BE130-9 | R11 | 200 M Ohm-1/3 watt-20% Carbon | 1 | .08 |
| 1068 | BE130-12 | R2 | 50 M Ohm-1/3 watt-20% Carbon | 1 | .08 |
| 1353 | BE130-17 | R1 | 10M Ohm-1/3 watt- 20% Carbon | 1 | .08 |
| | BE130-118 | R12 | 600M Ohm-1/3 watt-20% Carbon | 1 | .08 |
| 1094 | BE130-149 | R4 | 15M Ohm-1/3 watt-20% Carbon | 1 | .08 |
| 1090 | BE130-170 | R8,R10 | 3 Megohm-1/3 watt-25% Carbon | 2 | .08 |
| | | | **COILS** | | |
| 0534 | BE108-82D | T3 | Input I.F. Coil Assembly Complete with Can | 1 | .60 |
| 0536 | BE108-83D | T4 | Output I.F. Coil Assembly Complete with Can | 1 | .60 |
| | BE110-72 | T2 | Oscillator Coil Assembly Complete | 1 | |
| | BE111-58B | T1 | Antenna Coil Assembly Complete | 1 | .40 |
| | | | **SOCKETS** | | |
| | BE121-27 | | Eight Prong Octal Socket—Marked "6K7" | 1 | .10 |
| 0234 | BE121-15 | | Five Prong Octal Socket—Marked "5Y3" | 1 | .08 |
| | BE121-22 | | Eight Prong Octal Socket—Marked "6A8" | 1 | .10 |
| | BE121-86 | | Eight Prong Octal Socket—Marked "6K6" | 1 | .10 |
| | BE121-21 | | Eight Prong Octal Socket—Marked "6Q7" | 1 | .10 |
| | | | **TRANSFORMERS** | | |
| | BE104-100B | T6 | Power Transformer 50/60 cycle 105-120 volt | 1 | 1.50 |
| | BE104-102 | | Universal Transformer 50/60 cycle primary | | |
| | BE104-103 | | Power Transformer 25 cycle, 105-120 volt | | |
| | BE104-104 | | Universal Transformer 25 cycle primary | | |
| | BE104-99B | | Universal Transformer 40 cycle primary | | |
| | | | **SPEAKER** | | |
| | BE114-106 | T7 | Five Inch Dynamic (2000 Ohm Field) | 1 | 2.00 |
| | | | **MISCELLANEOUS** | | |
| 1130 | BE101-101 | R9,S1 | Volume Control and Switch (1 Megohm) | 1 | .50 |
| | BE102-64 | C | Two Gang Variable Condenser | 1 | |
| | BE105-55 | T5 | Output Transformer for Speaker (Mounted on Chassis) | 1 | .50 |
| | BE107-98 | | Line Cord and Plug | 1 | .24 |
| | BE118-69 | | Bottom Cover Plate for Chassis | 1 | .30 |
| | BE117-133 | | Brass Bushings for mounting bottom plate | 4 | .01 |
| 1325 | BE128-126E | | Black Bakelite Tuning Knob | 1 | .12 |
| 1530 | BE128-126W | | Ivory Bakelite Tuning Knob | | .12 |
| 1569 | BE128-126BR | | Walnut Bakelite Tuning Knob | | .12 |
| 1570 | BE128-134E | | Black Bakelite Knob | 1 | .06 |
| 1120 | BE128-134W | | Ivory Bakelite Knob | | .06 |
| 1121 | BE128-134BR | | Walnut Bakelite Knob | | .06 |
| | BE128-127E | | Black Bakelite cabinet complete, including baffle, grill cloth and carton | 1 | 3.00 |
| | BE128-127W | | Ivory bakelite cabinet complete including baffle, grill cloth and carton | | 5.00 |
| | BE128-127BR | | Walnut bakelite cabinet complete, including baffle, grill cloth and carton | | 3.00 |
| | BE128-129 | | Grill cloth back and front (specify color of cabinet) | 2 | .08 |
| | BE128-129B | | Cloth for end (specify color of cabinet) | 1 | .04 |
| | BE128-129C | | Cloth for end (specify color of cabinet — Small | 1 | |
| | BE128-132B | | Baffle Board | 1 | .03 |
| | BE132-82 | | No. 6x32x½ bottom plate and chassis mounting screws | 5 | dz. .04 |
| | BE134-48 | | Rubber grommet (for bottom plate) | 4 | .02 |
| | | | **DIAL PARTS LIST** | | |
| | BE112-349 | | Automatic Tuning Unit Complete Including Levers, Dial Scale and Indicator Film But Less Gang Condenser | | 4.00 |
| 11122 | BE107-94 | | Pilot Light Bulb | | .08 |
| | BE107-68 | | Pilot Light Bracket and Socket | | .05 |
| 11075 | BE112-347 | | Dial Scale (Calibrated) | | .30 |
| 10851 | BE131-43 | | Cinch Buttons for Fastening Dial Scale to Automatic Tuning Housing | | .01 |
| | BE112-343 | | Indicator Film | | .15 |
| | BE120-162 | | Take-up Spring for Indicator Film | | .04 |
| | BE128-126 | | Tuning Knob (Bakelite) (Specify Color) | | .12 |
| | BE117-192 | | Locking Screw for Tuning Knob | | .06 |
| | BE112-341 | | Idler Pulley and Shaft for Indicator Film | | .09 |
| | BE134-58 | | Felt Shield for Levers | | .04 |
| | BE120-143 | | Take-up Spring for Levers | | .03 |
| | BE112-339 | | Special Flexible Coupling Unit (Couple Gang Condenser to Automatic Tuner Assembly) | | .20 |
| 10730 | BE120-9 | | Drive String for Indicator Film | | .04 |
| 10956 | BE120-151 | | Take-up Spring for 120-9 Drive String | | .04 |
| | BE112-348 | | Set of 4 Sheets Station Call Letter Tabs | | Set .10 |
| | BE112-336 | | Clear Pyralin Tabs for Station Call Letter Tabs | | Doz. .05 |
| | BE128-128 | | Buttons for Automatic Levers | | .05 |

## CATHODE RAY TUNING EYE PARTS

| | | | | | |
|---|---|---|---|---|---|
| | BE107-109 | R3 | Cable and Socket Assembly Complete with 250M Resistor | 1 | .34 |
| | BE117-143 | | Clamp and Wing Bolt for Tuning Eye Socket | 1 | .10 |

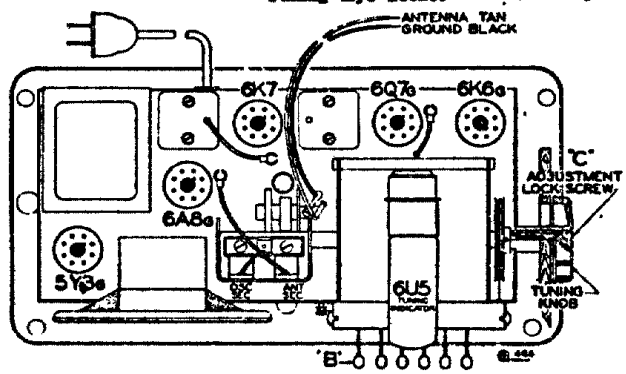

## ISSUE B

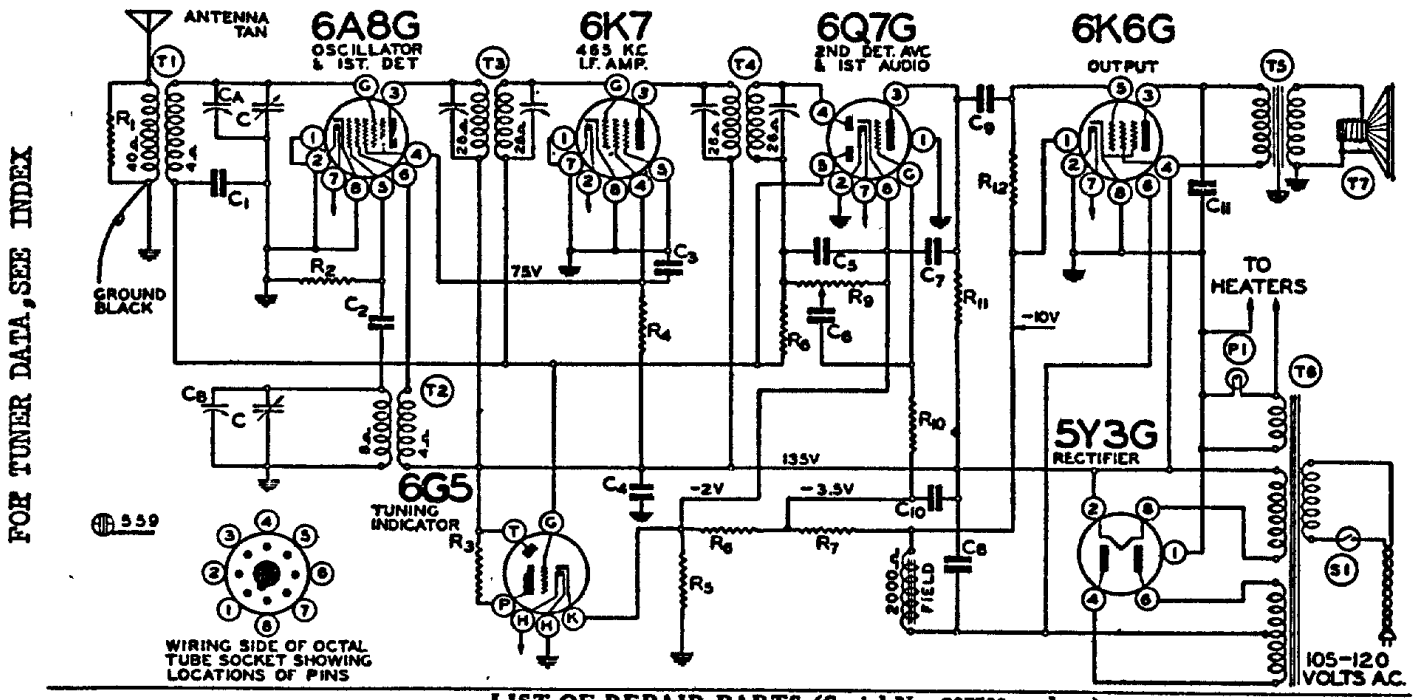


FOR TUNER DATA, SEE INDEX

## ISSUE B

## LIST OF REPAIR PARTS (Serial No. 207500 and up)

| Item No. | Part No | schematic reference | Description | No. Used in set | Selling price each |
|---|---|---|---|---|---|
| | | | **CONDENSERS** | | |
| 10979 | BE100-1 | C3 | .1x400 volt Tubular | 1 | .10 |
| 11389 | BE100-9 | C1 | .05x200 volt Tubular | 1 | .10 |
| 11256 | BE100-11 | C6,C9 | .01x400 volt Tubular | 2 | .09 |
| | BE100-13 | C4 | .05 x 400 Volt Tubular | 1 | .10 |
| 10925 | BE100-19 | C11 | .006x600 volt Tubular | 1 | .09 |
| | BE119-47B | C8,C10 | 5 Mfd. x 200 w.v.; 5 Mfd. x 250 w.v. Electrolytic Filter | 1 | .70 |
| 10930 | BE129-2 | C7 | .0005 Mica — Type — 20% | 1 | .09 |
| 11335 | BE129-5 | C5 | .0001 Mica — Type — 20% | 1 | .09 |
| 10922 | BE129-12 | C2 | .00025 Mica — Type — 20% | 1 | .10 |
| | | | **RESISTORS** | | |
| | BE106-35 | R5,R6,R7 | 65 Ohm, 45 Ohm, 220 Ohm metal Clad Resistor | 1 | .20 |
| 11097 | BE130-9 | R11 | 200 M Ohm-1/3 watt-20% Carbon | 1 | .08 |
| 11068 | BE130-12 | R2 | 50 M Ohm-1/3 watt-20% Carbon | 1 | .08 |
| 11353 | BE130-17 | R1 | 10M Ohm-1/3 watt- 20% Carbon | 1 | .08 |
| | BE130-118 | R12 | 600M Ohm-1/3 watt-20% Carbon | 1 | .08 |
| 11094 | BE130-21 | R4 | 20M Ohm-1/3 watt-20% Carbon | 1 | .08 |
| 11090 | BE130-170 | R8,R10 | 3 Megohm-1/3 watt-25% Carbon | 2 | .08 |
| | | | **COILS** | | |
| 10534 | BE108-82D | T3 | Input I.F. Coil Assembly Complete with Can | 1 | .60 |
| 10536 | BE108-83D | T4 | Output I.F. Coil Assembly Complete with Can | 1 | .60 |
| | BE110-72 | T2 | Oscillator Coil Assembly Complete | 1 | |
| | BE111-102 | T1 | Antenna Coil Assembly Complete | 1 | .40 |
| | | | **SOCKETS** | | |
| | BE121-93 | | Eight Prong Octal Sockets | 4 | .10 |
| 10234 | BE121-95 | | Five Prong Octal Sockets | 1 | .08 |
| | | | **TRANSFORMERS** | | |
| 9097 | BE104-100B | T6 | Power Transformer 50/60 cycle 105-120 volt | 1 | 1.50 |
| | BE104-108B | | Power Transformer 25 cycle, 105-120 volt | | |
| | BE104-104B | | Universal Transformer 25 cycle primary | | |
| | BE104-99C | | Universal Transformer 40 cycle primary | | |

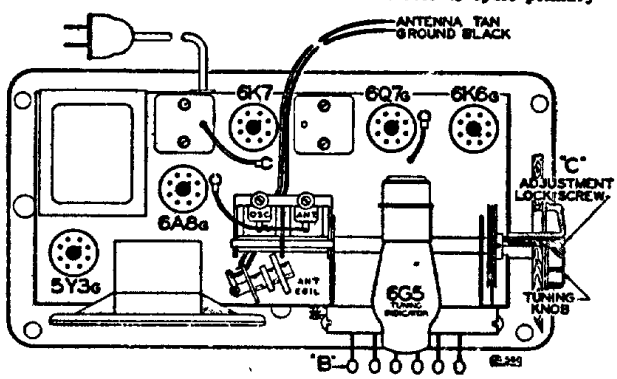


Voltages taken from different points of circuit to chassis are measured with volume control full on, all tubes in their sockets and speaker connected, with a volt meter having a resistance of 1000 ohms per volt.

All voltages as indicated on diagram are measured with 115 volts on the primary of the power transformer.

Resistances of coil windings are indicated in ohms on the schematic circuit diagram.

To check for open by-pass condensers, shunt each condenser with another condenser of the same capacity and voltage rating, which is known to be good, until the defective unit is located.

Excessive hum, stuttering, low volume and a reduction in all D.C. voltages is usually caused by a shorted electrolytic condenser; open by-pass condensers frequently cause oscillation and distorted tone.

### ALIGNING INSTRUCTIONS: ISSUES "A" AND "B"

CAUTION:—No aligning adjustments should be attempted without first thoroughly checking over all other possible causes of trouble, such as poor installations, open or grounded antenna systems, low line voltages, defective tubes, condensers and resistors. In order to properly align this chassis, an oscillator (generator) is absolutely necessary. No aligning adjustments should be attempted with the chassis in the cabinet.

### RESONANCE INDICATOR:

Use as a resonance indicator an output meter connected across the primary of the speaker input transformer, or by means of an adapter between the plate and screen terminals of the type 6K6G output tube. Maximum deflection of the meter indicates resonance. Use only enough signal to get a readily readable output. A low range output meter or the low scale of a multi-range meter should be used.

### ALIGNING I.F. TRANSFORMERS: (465 K.C.):

Part No. 108-83D Output I.F. Transformer
Part No. 108-82D Input I.F. Transformer

These I.F. transformers have two adjustments, both of which are accessible from the top of chassis (see Fig. 1).

1. With volume control full on (the extreme right of its rotation), and with the variable condenser set to approximately 1400 kilocycles, make the following adjustments:
   (a) Connect external oscillator set at 465 kilocycles, in series with .1 mfd. condenser, to the control grid cap of the type 6K7 tube, and adjust the output I. F. transformer (No. 108-83D) to resonance.
   (b) Move oscillator output clip from grid of 6K7 to grid of 6A8G and adjust input I.F. transformer (No. 108-82D) to resonance.
   (c) With oscillator still connected to 6A8G, readjust output I.F. transformer (108-83D) if necessary.

### R.F. ALIGNMENT: (535-1720 K.C.)

1. With gang condenser in its minimum capacity position, plates entirely out of mesh, connect an external oscillator in series with a 200 mmf. condenser to the antenna lead and chassis ground and make the following adjustments:
   (a) With external oscillator set at 1720 kilocycles, adjust oscillator trimmer to resonance. This adjustment is on the top of rear section of variable gang condenser. (See Fig. 1).
   (b) Re-set external oscillator to 1400 kilocycles, rotate condenser, pick up oscillator signal and adjust antenna trimmer to resonance. (Top of front section of gang condenser).
   (c) Check sensitivity at 600 and 1000 kilocycles.