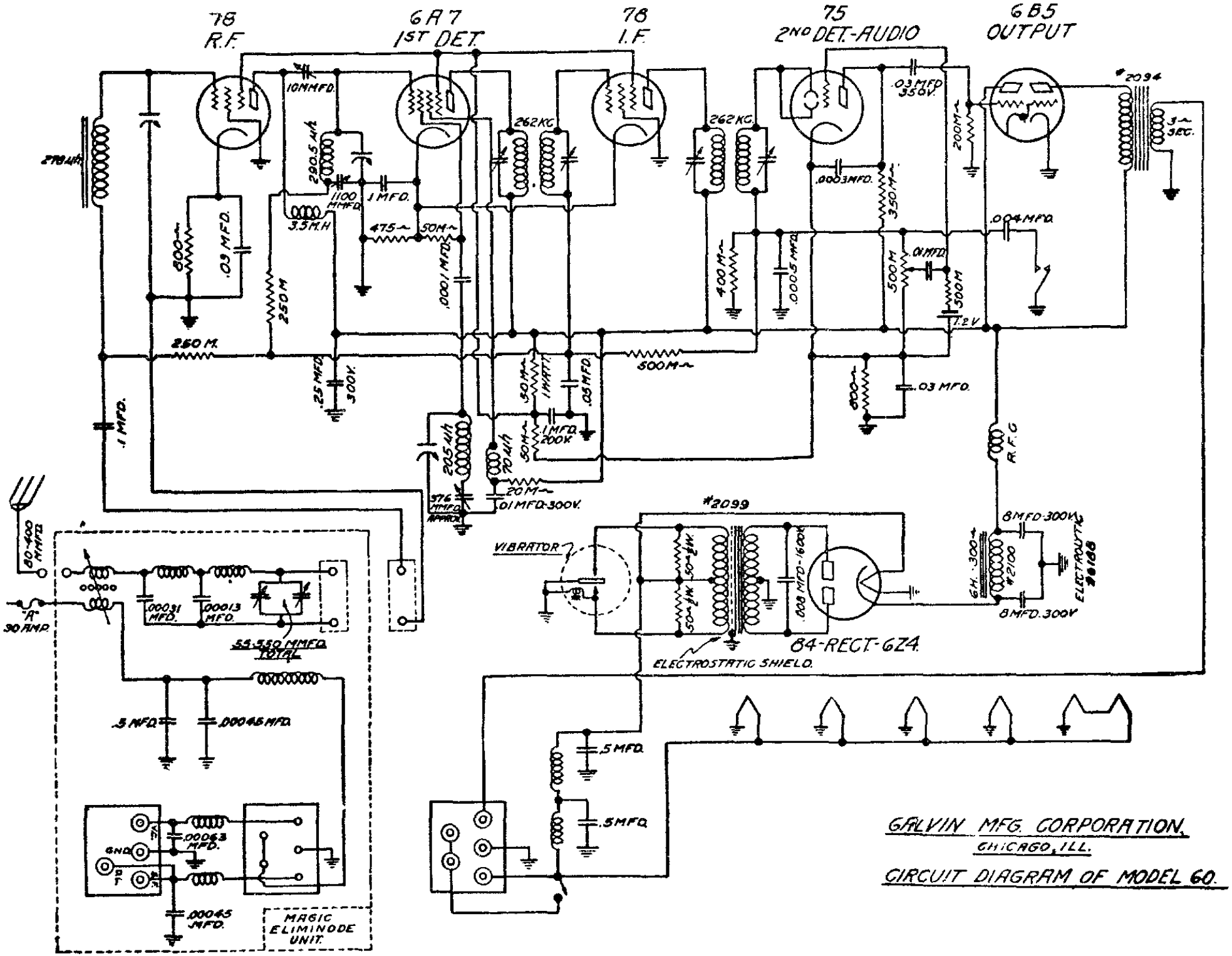

GALVIN MFG. CORPORATION,
CHICAGO, ILL.

CIRCUIT DIAGRAM OF MODEL 60.