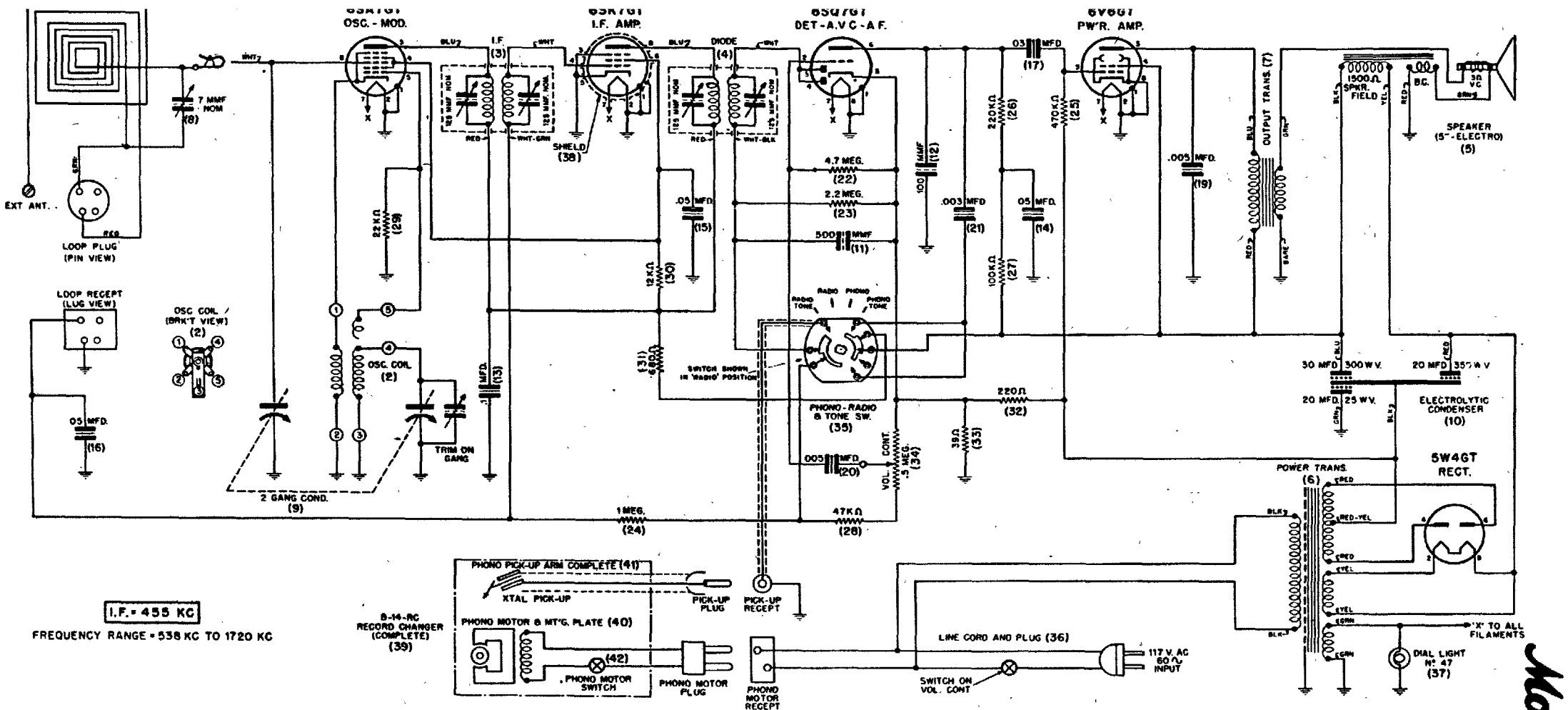

I.F. = 455 KC

FREQUENCY RANGE = 538 KC TO 1720 KC

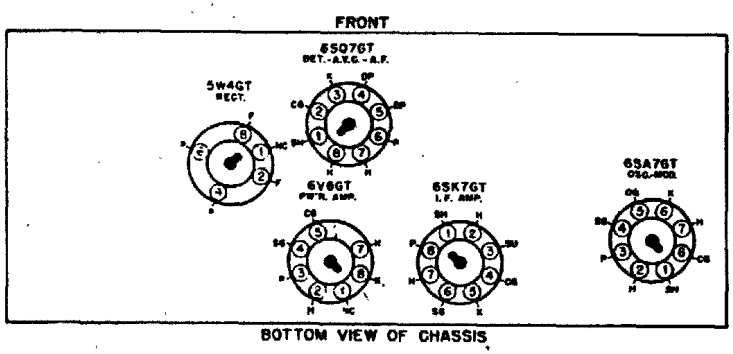

VOLTAGE CHART - 117 V AC INPUT *				
TUBE		PLATE TO GND.	SCREEN TO GRD	CATH. TO GND.
6SA7GT	OSC.-MOD.	210 V	100 V	0
6SK7GT	I.F. AMP.	220 V	100 V	0
6SQ7GT	DET.-AVC-A.F.	90 V	—	-2.2 V
6V6GT	PW'R. AMP.	205 V	220 V	0
5W4GT	RECT.	A.C.	—	300 V FROM FIL.

NOTE: ALL VOLTAGES MEASURED WITH A 20,000 OHM PER VOLT VOLTMETER

MAX. PWR OUTPUT - 3.5 WATTS

* PHONO-RADIO-TONE SWITCH IN RADIO POSITION

** BIAS, MEASURED FROM B- TO CHASSIS, -15 VOLTS

MODEL 51F11 SCHEMATIC DIAGRAM PARTS LIST

DIAG. NO.	PART NO.	DESCRIPTION
1	1127889	BACK & LOOP ASSEMBLY
2	2525642	OSCILLATOR COIL
3	1127860	I.F. COIL & SHIELD ASSEMBLY
4	1121698	DIODE COIL & SHIELD ASSEMBLY
5	9262307	SPEAKER (5" ELECTRO)
6	2526202	POWER TRANSFORMER
7	2541076	OUTPUT TRANSFORMER
8	2041740	TRIMMER & "U" BRACKET (7 MMF NOM.)
9	1982907	VARIABLE CONDENSER (2 GANG)
10	2542881	ELECT. COND. & STRAP (20 MFD/350W.V.-20 MFD/300W.V.-20 MFD/25W.V.)
11	2186500	MOLDED MICA COND. (500 MMF-20-(.001W.V.) SEM "O"
12	2186511	MOLDED MICA COND. (100MMF-20%-(.001W.V.) SEM "O"
13	895607	TUBULAR CONDENSER (.1 MFD-(.001W.V.)
14	895614	TUBULAR CONDENSER (.05 MFD-(.001W.V.)
15	895621	TUBULAR CONDENSER (.05 MFD-(.001W.V.)
16	895605	TUBULAR CONDENSER (.05 MFD-(.001W.V.)
17	895606	TUBULAR CONDENSER (.03 MFD-(.001W.V.)
18	895633	TUBULAR CONDENSER (.03 MFD-(.001W.V.)
19	895623	TUBULAR CONDENSER (.005 MFD-(.001W.V.)
20	895613	TUBULAR CONDENSER (.005 MFD-(.001W.V.)
21	895635	TUBULAR CONDENSER (.003 MFD-(.001W.V.)
22	646368	CARBON RESISTOR (4.7 MEG-1/5WATT-20%) INS.
23	646369	CARBON RESISTOR (2.2 MEG-1/5WATT-20%) INS.
24	646159	CARBON RESISTOR (1 MEG-1/5WATT-20%) INS.
25	606160	CARBON RESISTOR (470,000-1/5WATT-20%) INS.
26	646204	CARBON RESISTOR (220,000-1/5WATT-20%) INS.
27	606165	CARBON RESISTOR (100,000-1/5WATT-20%) INS.
28	646321	CARBON RESISTOR (47,000-1/5WATT-20%) INS.
29	646242	CARBON RESISTOR (22,000-1/5WATT-20%) INS.
30	646183	CARBON RESISTOR (12,000-1WATT-10%) N.I.
31	646006	CARBON RESISTOR (680-1/5WATT-20%) N.I.
32	646202	CARBON RESISTOR (220-1/2WATT-10%) N.I.
33	646203	CARBON RESISTOR (39-1/2WATT-10%) N.I.
34	1841939	VOL. CONT. & SWITCH (.5 MEG)
35	4042780	PHONO-RADIO & TONE SWITCH
36	304151	LINE CORD & PLUG (6 FT.)
37	6511184	BULB (6.3V.-.15A TUB. BAY) CLEAR BLB
38	2541760	SMITH TUBE SHIELD
39	1127890	MODEL B-14-RC RECORD CHANGER (COMPLETE)
40	9962687	PHONO MOTOR & MTG. PLATE (117 Volt 60 Cycle)
41	5942786	PHONO PICKUP ARM (COMPLETE)
	5942786	CARTRIDGE & LEADS (ONLY)
42	4042758	SLIDER SWITCH (2 POS.) (S.P.D.T.)

Motorola

MODEL 51 F 11