MODEL Motorola
5T-71

GALVIN MFG. CO.
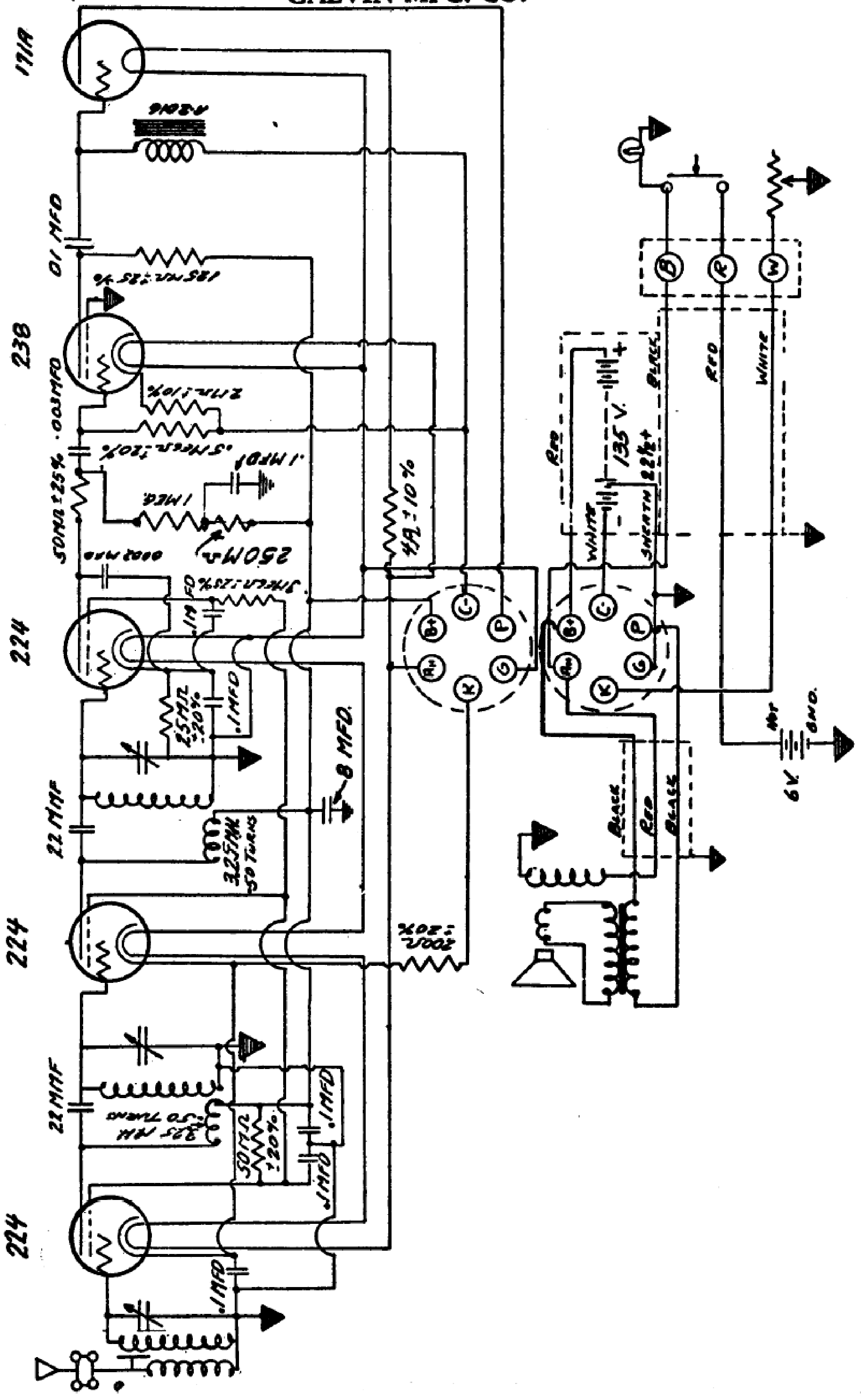
OCT. 1, 1931