Model 34F1, Chassis HS-444

and

Model 34F1C, Chassis HS-467

MOTOROLA

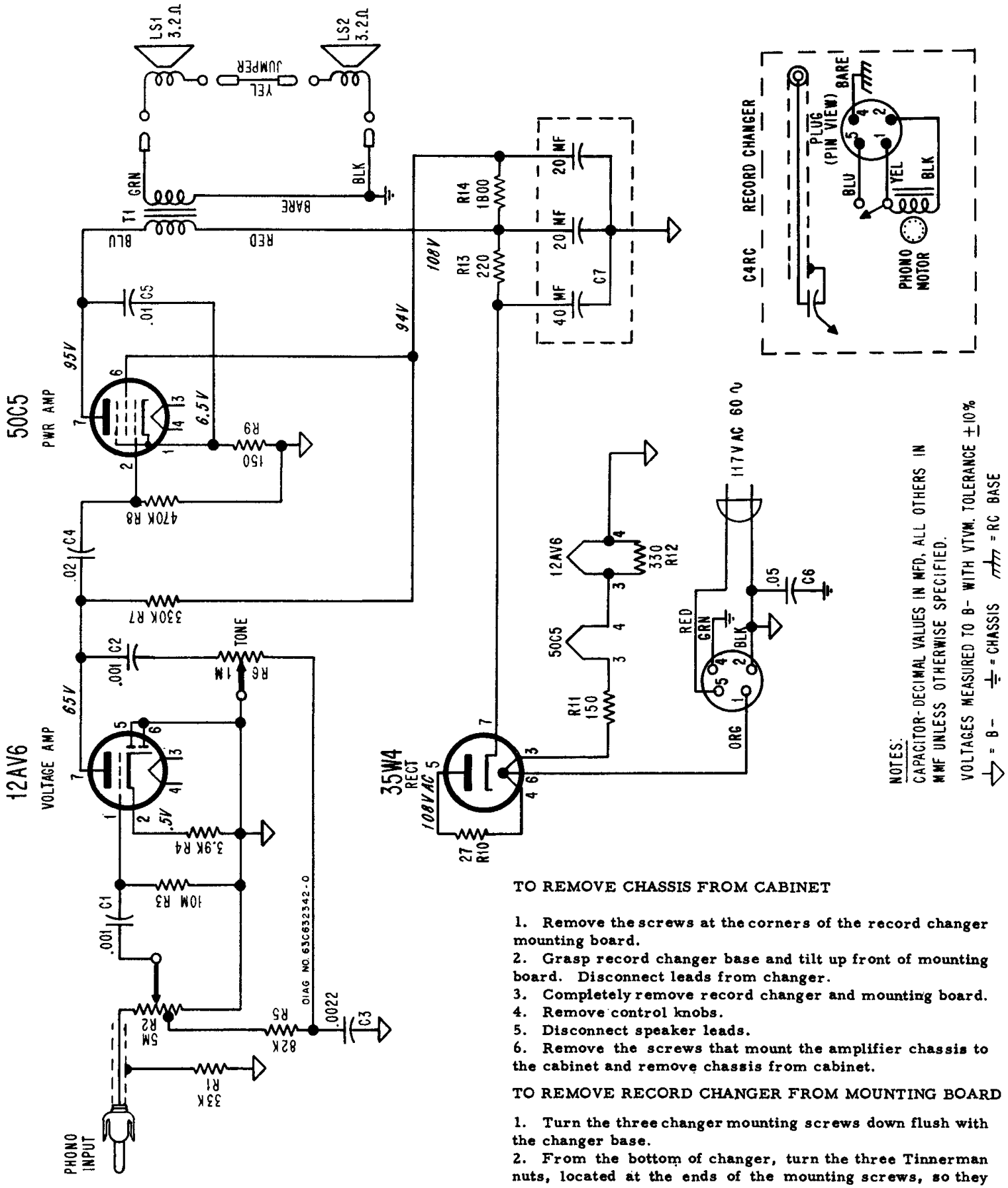

TO REMOVE CHASSIS FROM CABINET

1. Remove the screws at the corners of the record changer mounting board.
2. Grasp record changer base and tilt up front of mounting board. Disconnect leads from changer.
3. Completely remove record changer and mounting board.
4. Remove control knobs.
5. Disconnect speaker leads.
6. Remove the screws that mount the amplifier chassis to the cabinet and remove chassis from cabinet.

TO REMOVE RECORD CHANGER FROM MOUNTING BOARD

1. Turn the three changer mounting screws down flush with the changer base.
2. From the bottom of changer, turn the three Tinnerman nuts, located at the ends of the mounting screws, so they are parallel with the screws.
3. Grasp record changer by the base and lift up.