STEWART-WARNER MODELS 9170-B, 9170-C, & 9170-D

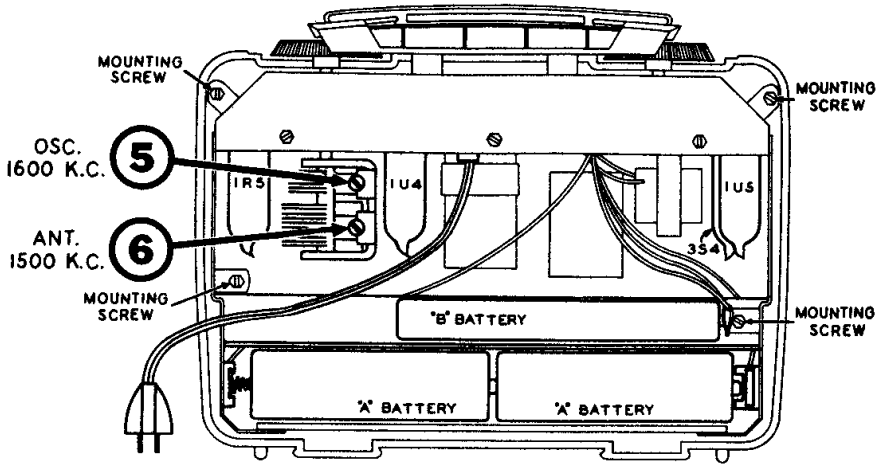

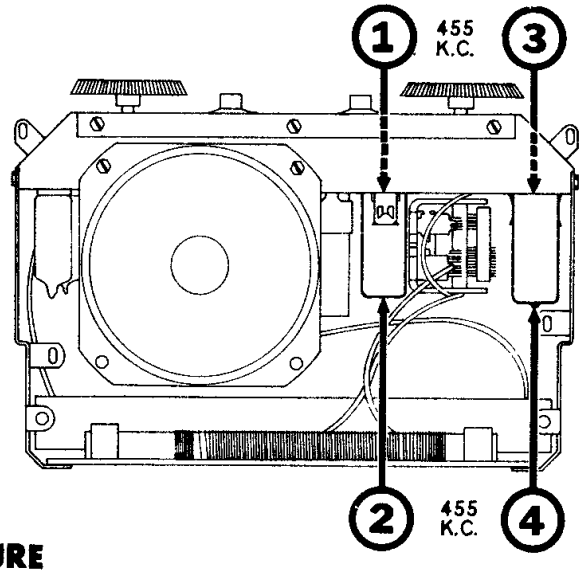

ALIGNMENT PROCEDURE

SIGNAL GENERATOR CONNECTIONS		SIGNAL GENERATOR FREQUENCY	RECEIVER DIAL SETTING	TRIMMER OR SLUG NUMBER	TRIMMER DESCRIPTION	TYPE OF ADJUSTMENT
CONNECT HIGH SIDE OF SIGNAL GENERATOR TO	CONNECT GROUND LEAD OF SIGNAL GENERATOR TO					
Lug on trimmer #6 at side of gang (see chart below for location of trimmer).	Any B— terminal in chassis.	455 KC	Any point where it does not affect the signal.	1 and 2	2nd I.F.	Adjust for maximum output. Then repeat adjustment.
				3 and 4	1st I.F.	

IMPORTANT: Before undertaking alignment of the oscillator and antenna trimmers it is necessary to reassemble the chassis in the cabinet. The tuning knob should be installed on the gang condenser shaft so that when the condenser is fully meshed, the dot under the smaller 5 of the 55 on dial scale is directly opposite the pointer (gold mark on cabinet). As battery position slightly affects R.F. alignment, it is preferable to have batteries in proper place. To gain access to oscillator and antenna trimmers, it will be necessary to open back of cabinet. In order to provide a coupling for the signal generator, during this part of the procedure, wind several turns of wire in a circular shape to form a radiating loop that may be placed adjacent (axes parallel) to the loop antenna. Now complete the alignment procedure as follows.

Connect directly to radiating loop. (See above for instructions on radiating loop.) Rotate and adjust loop for maximum input.	1600 KC	1600 KC	5	Broadcast Oscillator	Adjust for maximum output.
Same as above.	1500 KC	Tune to 1500 Kc. generator signal.	6	Broadcast Antenna	Adjust for maximum output.

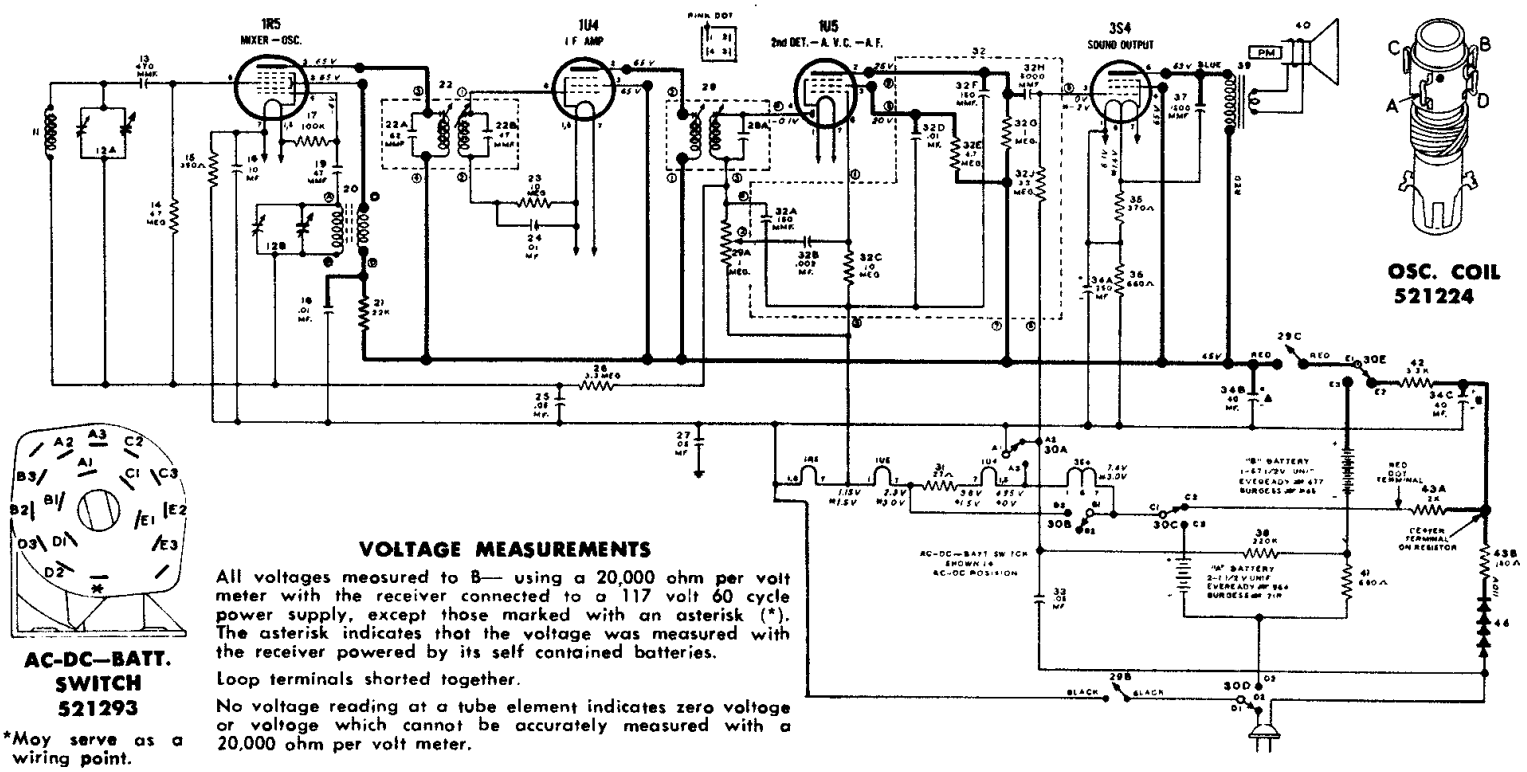

VOLTAGE MEASUREMENTS

All voltages measured to B— using a 20,000 ohm per volt meter with the receiver connected to a 117 volt 60 cycle power supply, except those marked with an asterisk (*). The asterisk indicates that the voltage was measured with the receiver powered by its self contained batteries.

Loop terminals shorted together.

No voltage reading at a tube element indicates zero voltage or voltage which cannot be accurately measured with a 20,000 ohm per volt meter.