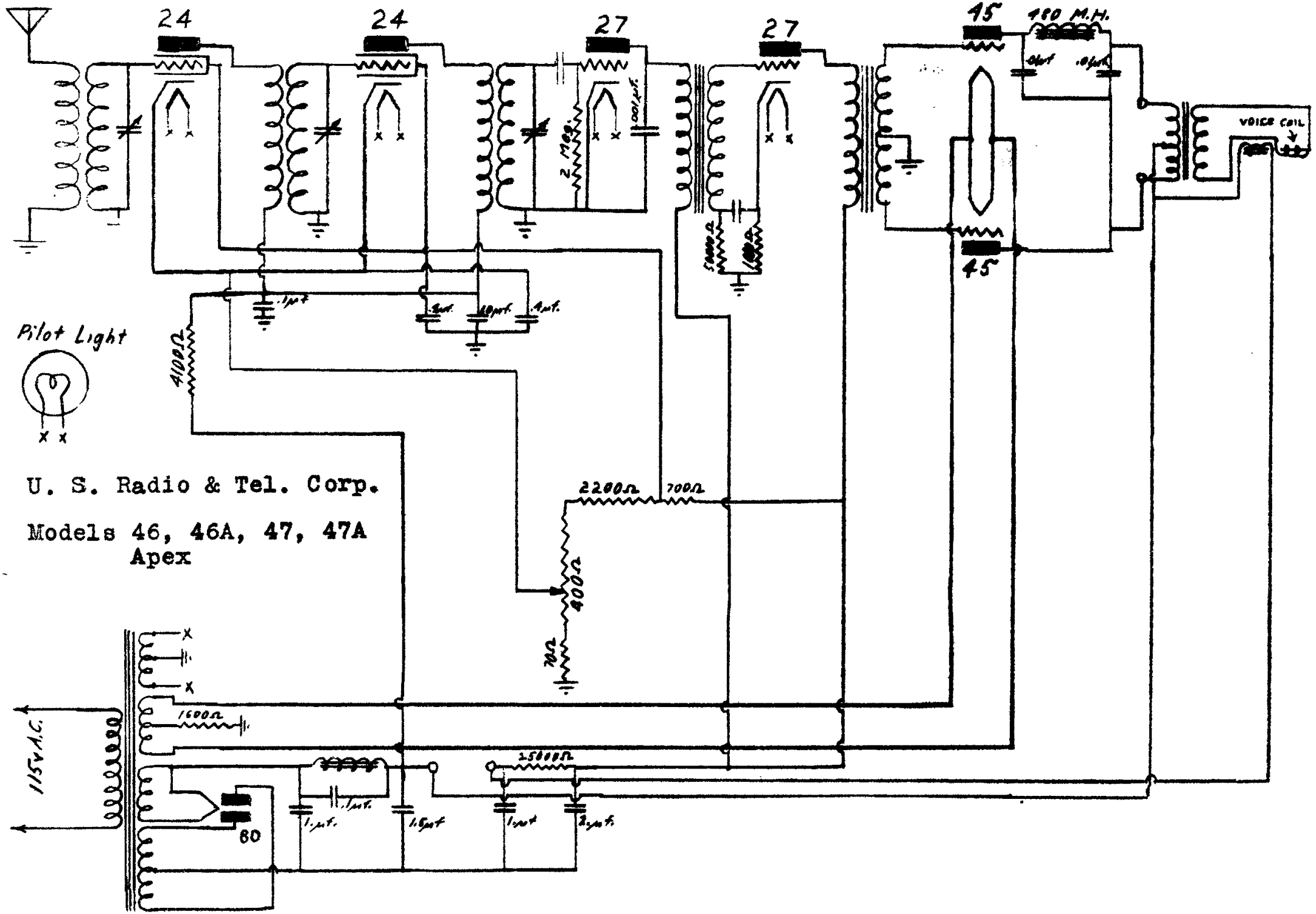

U. S. Radio & Tel. Corp.

Models 46, 46A, 47, 47A
Apex