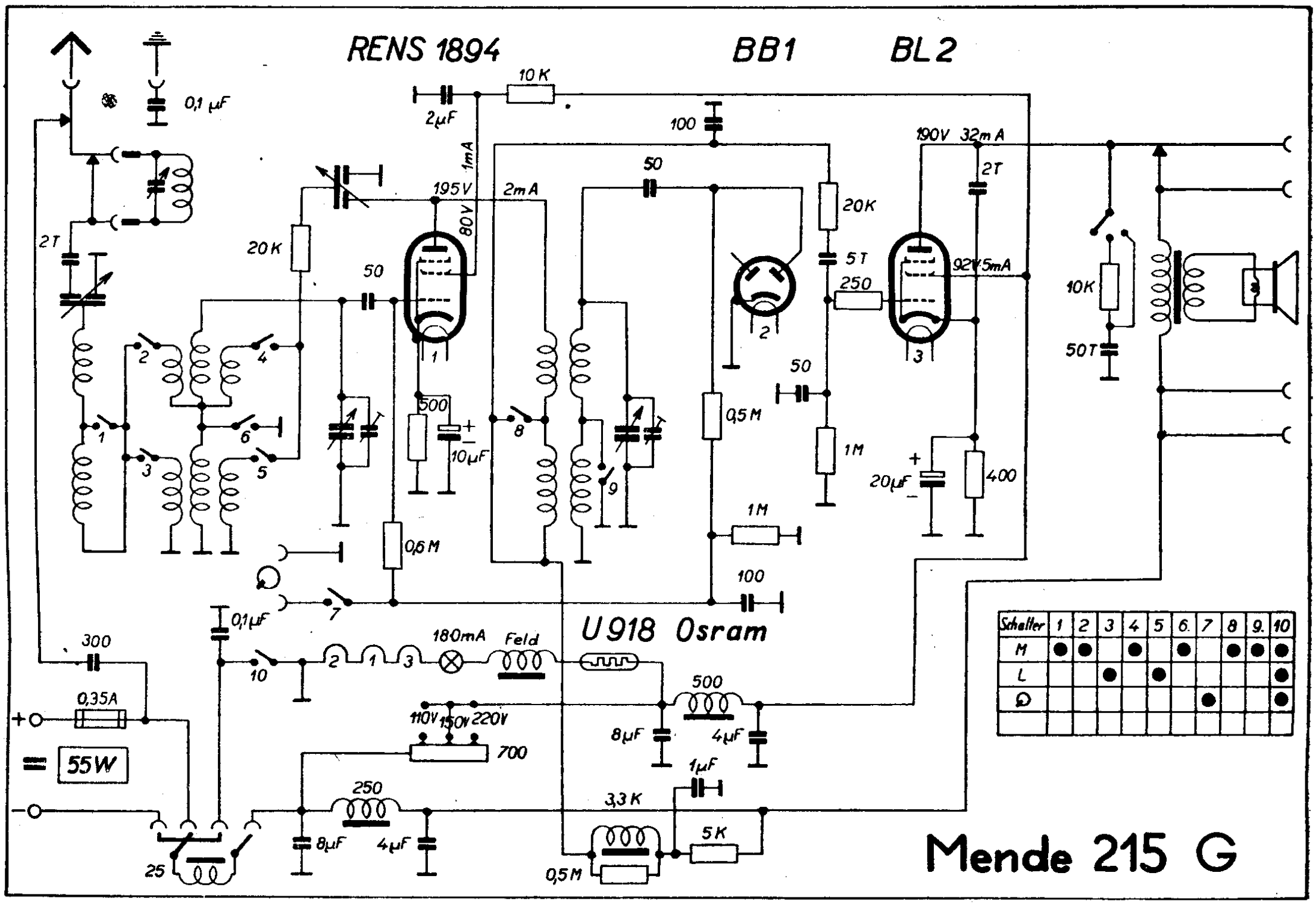

Schalter	1	2	3	4	5	6.	7	8	9.	10
M	●	●		●		●		●	●	●
L			●		●					●
☊							●			●