CIRCUIT DIAGRAM MODELS D700, D723

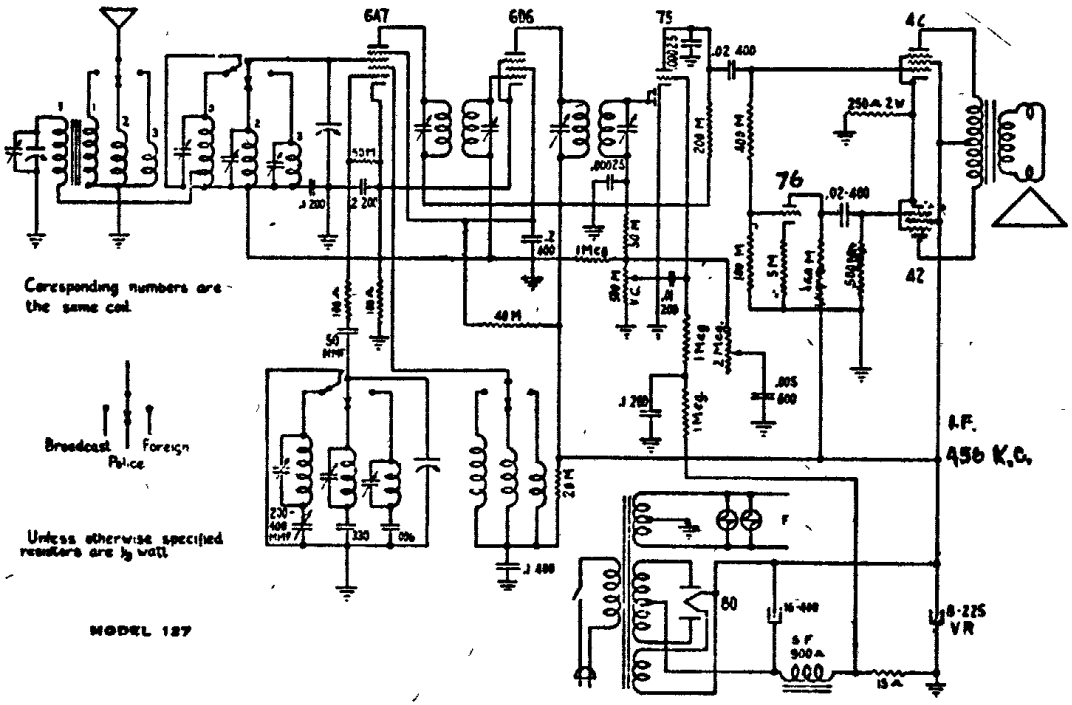

TUBE LAYOUT

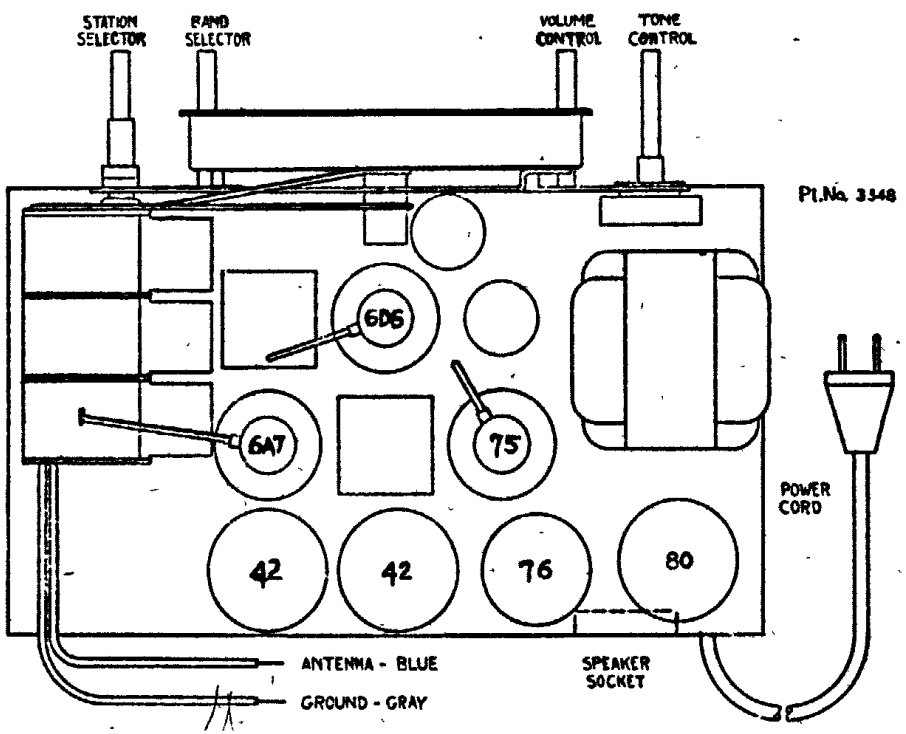

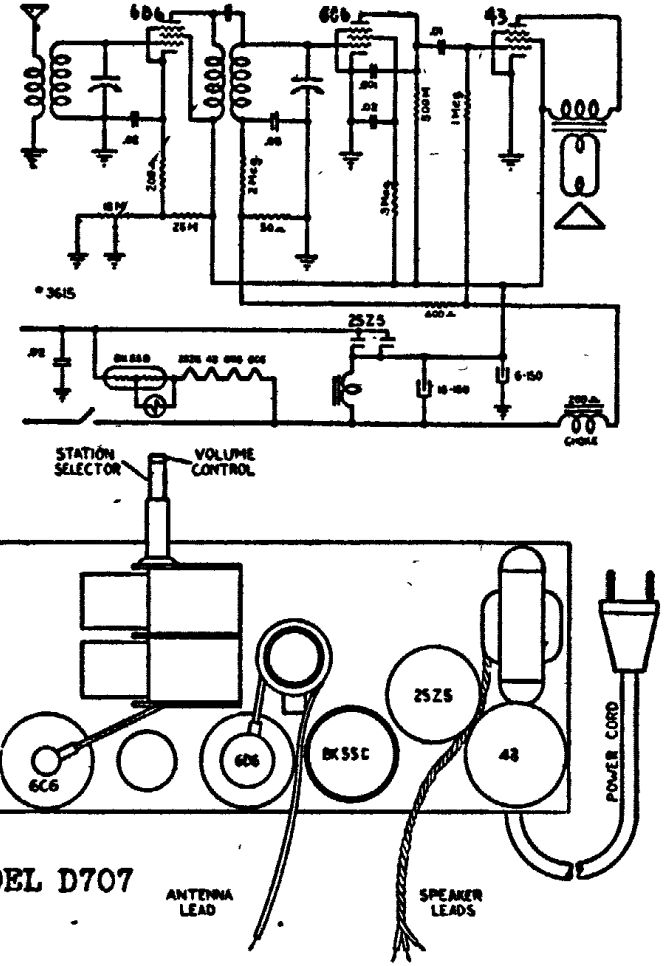

MODEL D707

OPERATION INSTRUCTIONS

This receiver is designed to operate on 105 to 125 volts, direct or alternating current. Do not connect to any other source unless designated on instruction card. Connect attachment plug to light socket. See that all tubes are properly inserted in sockets as per chart showing top view of chassis. The aerial furnished with the receiver should be strung around a picture molding or under the edge of a rug. Turn operating switch on by turning the volume knob to the right. Continue to turn volume control in clock-wise direction as far as it will go and allow an interval of time for tubes to become heated. Turn the station selector knob slowly until station is heard clearly and reduce volume to desired intensity by turning volume control knob to the left.

This receiver covers a continuous range from 540 to 1725 KC. Standard and experimental broadcast stations will be received between 540 and 1600 KC. Many police stations can be received near 1700 KC.

The following tubes are used in this receiver:

1—No. 6D6 R. F. Amplifier
1—No. 6C6 Detector
2—No. 43 Power Output
1—No. 25Z5 Rectifier
1—BK 55B Regulator

If this receiver should fail to operate when connected to direct current, reverse the attachment plug in the light socket.

WESTERN AUTO SUPPLY CO.

MODELS D-700, D-723
(1937)
MODEL D-707