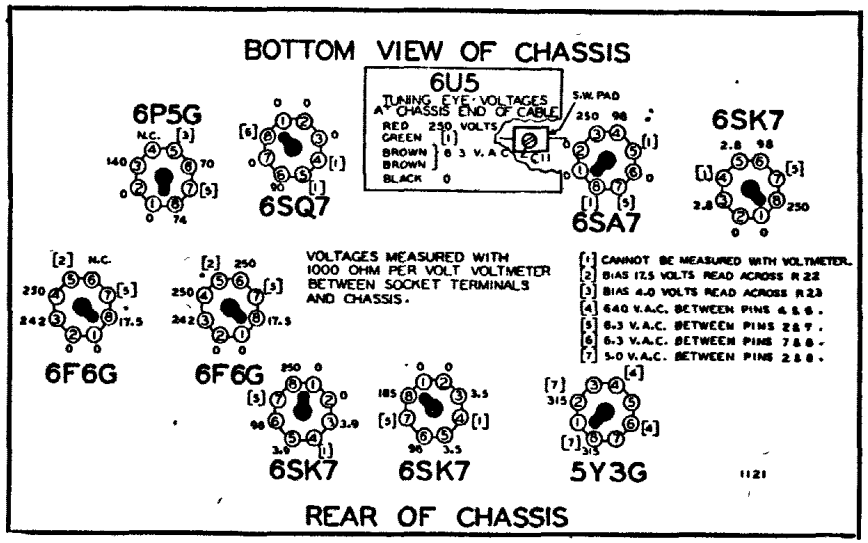

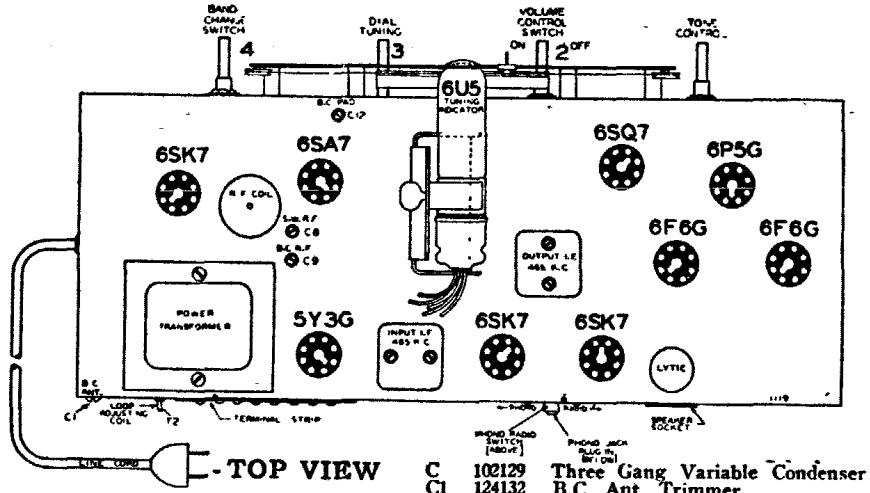

ISSUE A
February 1940

BOTTOM OF CHASSIS

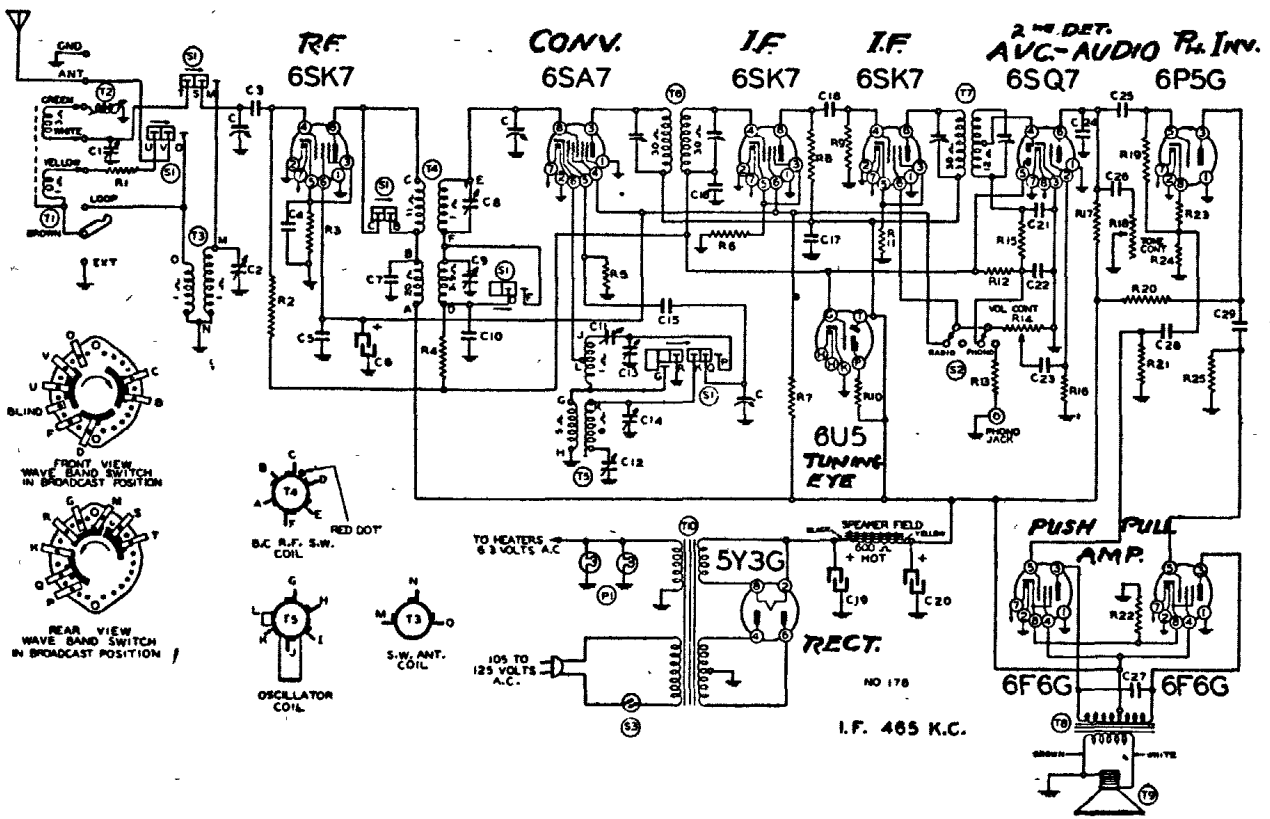

C	102129	Three Gang Variable Condenser
C1	124132	B.C. Ant. Trimmer
C2	124117	SW Antenna Trimmer
C3	1292	.0005 Mica
C4	10020	.1 x 200 v.
C5	100117	.25 x 400 v.
C6	119106	10 mfd. lytic—350 w. v.
C7	129160	.0004 mica
C8	124131	S.W. R.F. Trimmer
C9	129131	B.C. R.F. Trimmers
C10	10026	.02 x 400 v.
C11	129156	.0024 Compression S.W. Pad
C12	129157	.000525 Compression B.C. Pad
C13	124130	S.W. Oscillator trimmer
C14	124130	B.C. Oscillator trimmer
C15	12939	.00005 Mica
C16	10026	.02 x 400 v.
C17	100117	.25 x 400 v.
C18	1292	.0005 mica
C19	119106	10 mfd. lytic—450 w. v.
C20	119106	15 mfd. lytic—450 w. v.
C21	1295	.0001 mica
C22	1295	.0001 mica
C23	10025	.002 x 600 v.
C24	12912	.00025 mica
C25	10026	.02 x 400 v.
C26	10011	.01 x 400 v.
C27	10071	.004 x 600 v.
C28	1009	.05 x 200 v.
C29	10013	.05 x 400 v.
		C6, C19 and C20 in one unit
		C8 and C9 in one unit
		C13 and C14 in one unit
R1	13024	400 ohm—⅓ w.
R2	13019	1 megohm—⅓ w.
R3	13099	300 ohm—⅓ w.
R4	1305	300M ohm—⅓ w.
R5	130208	40M ohm—⅓ w.
R6	13054	500 ohm—⅓ w.
R7	130304	12M ohm—2 watt
R8	130263	12M ohm—⅓ w.
R9	13020	100M ohm—⅓ w.
R10		1 megohm—in eye socket
R11	13054	500 ohm—⅓ w.
R12	130170	3 megohm—⅓ w.
R13	13019	1 megohm—⅓ w.
R14	101214	Volume Control (500M ohm)
R15	13012	50M ohm—⅓ w.
R16	130225	15 megohm—⅓ w.
R17	13011	250M ohm—⅓ w.
R18	101213	Tone Control—(1 Megohm)
R19	13019	1 megohm—⅓ w.
R20	13020	100M ohm—⅓ w.
R21	1303	500M ohm—⅓ w.
R22	130311	300 ohm—1 watt
R23	13022	5M ohm—⅓ w.
R24	13020	100M ohm—⅓ w.
R25	1303	500M ohm—⅓ w.

WESTERN AUTO SUPPLY CO.

MODEL D1041
Issue A