SONORA RADIO & TELEV CORP MODELS WLRU-219, WLRU-220A, WLRU-254A; 402F

9 TUBE AC
PHONO-AM FM
SUPERHETERODYNE

AM IF FREQ 455 KC
FM IF FREQ 107 MC

TUNING RANGE-AM 535 TO 1620 KC
FM 87 TO 109 MC

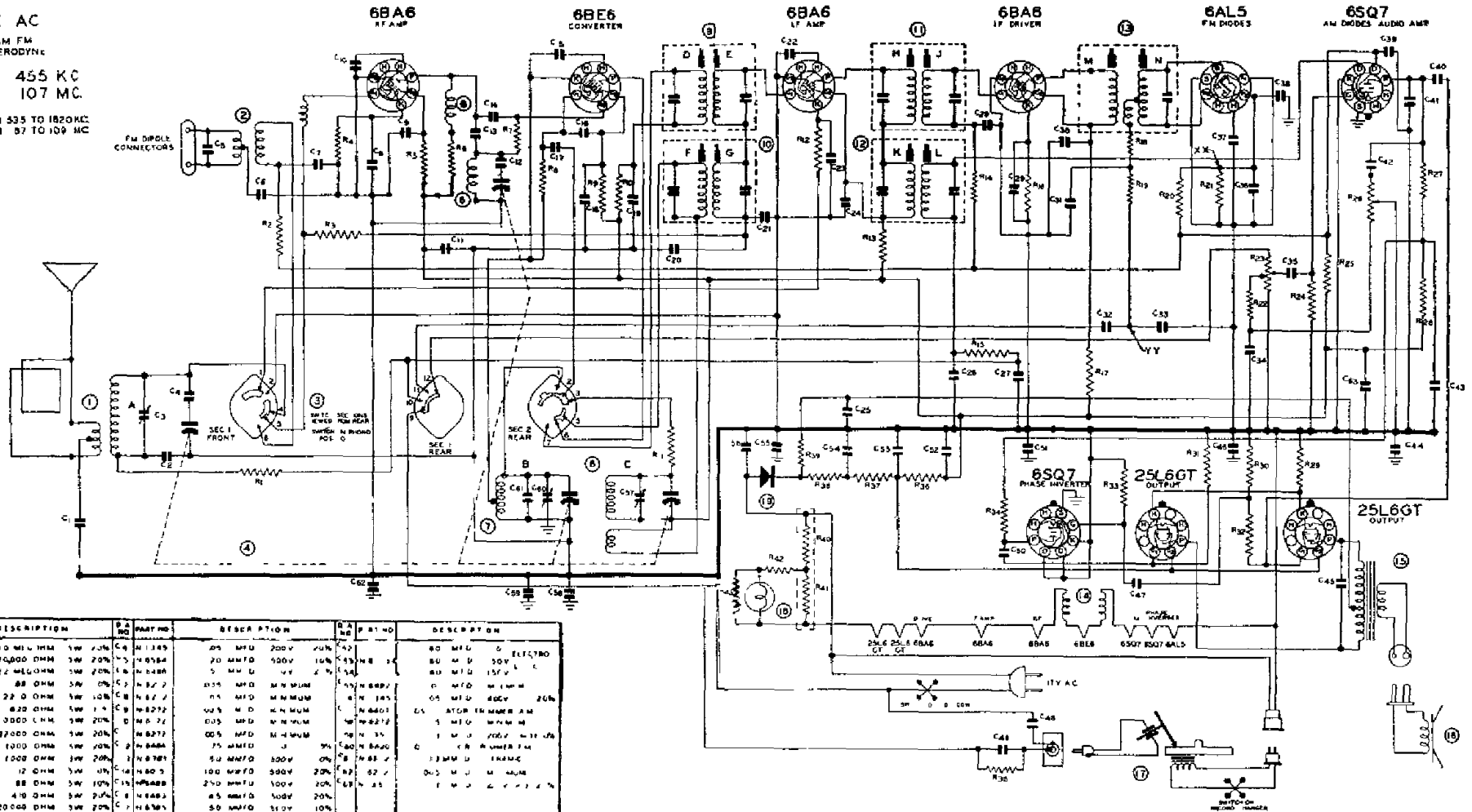

DIA NO	PART NO	DESCRIPTION
R1	N-282	10 MEGOHM 5W 20%
R2	N-4028	220,000 OHM 5W 20%
R3	N-4217	22 MEGOHM 5W 20%
R4	N-8865	68 OHM 5W 0%
R5	N-4885	22 0 OHM 5W 10%
R6	N-4270	620 OHM 5W 1 %
R7	N-4885	3000 OHM 5W 20%
R8	N-4095	22000 OHM 5W 20%
R9	N-1884	1000 OHM 5W 20%
R10	N-1884	1000 OHM 5W 20%
R11	N-5053	12 OHM 5W 0%
R12	N-8885	68 OHM 5W 10%
R13	N-60	470 OHM 5W 20%
R14	N-4095	220 000 OHM 5W 20%
R15	N-4063	4 000 OHM 5W 20%
R16	N-8885	68 OHM 5W 10%
R17	N-8011	470 OHM 5W 20%
R18	N-8885	68 OHM 5W 10%
R19	N-4084	33000 OHM 5W 20%
R20	N-2973	80,000 OHM 5W 10%
	N-4378	13 000 OHM 5W 5%
R21	N-4851	21000 OHM 5W 0%
R22	N-585	5 MEGOHM POT CONT
R23	N-4028	68 MEGOHM 5W 20%
R24	N-8885	10 MEGOHM 5W 10%
R25	N-4518	5 MEGOHM TONE CONT
R26	N-4017	220,000 OHM 5W 20%
R27	N-5693	68000 OHM 5W 0%
R28	962	100 OHM 5W 10%
R29	N-5890	2 000 OHM 5W 0%
R30	N-4007	6 0,000 OHM 5W 20%
R31	N-4896	470,000 OHM 5W 0%
R32	N-4026	68 MEGOHM 5W 20%
R33	N-4026	220 000 OHM 5W 20%
R34	N 282	10 MEGOHM 5W 20%
R35	N-85 4	220 OHM 10 W 20%
R36	N-5918	220 OHM 8 W 20%
R37	N-4515	33 OHM 5 W 0%
R38	N-8 5	33 OHM 5 W 0%
R39	N-6518	30 OHM 3 W 0%
R40		150 OHM 45 W 15%
R41	N-631	REGULATING RESISTOR
R42	N-631	REGULATING RESISTOR
C1	N 5 4	01
C2	N 345	05
C3	8 F	A TR

DIA NO	PART NO	DESCRIPTION
C4	N 1345	05 MFD 200V 20%
C5	N 6584	20 MMFD 500V 10%
C6	N 8486	5 MMFD 5%
C7	N 6272	005 MFD MINIMUM
C8	N 6272	01 MFD MINIMUM
C9	N 6272	005 MFD MINIMUM
C10	N 6272	005 MFD MINIMUM
C11	N 6272	005 MFD MINIMUM
C12	N 8486	75 MMFD 5%
C13	N 6781	50 MMFD 500V 0%
C14	N 60 5	100 MMFD 500V 20%
C15	N-5488	250 MMFD 500V 20%
C16	N 6483	85 MMFD 500V 20%
C17	N 6581	50 MMFD 500V 10%
C18	N 6272	005 MFD
C19	N 6272	01 MFD
C20	N 1345	05 MFD 200 2 5%
C21	N 6272	005 MFD
C22	N 6272	005 MFD
C23	N 6272	5 MFD
C24	N 6272	005 MFD
C25	N 6312	80 MFD 50 V ELECTROLYTIC
C26	N-6375	50 MMFD 500V 20%
C27	N 6375	50 MMFD 500V 20%
C28	N 6272	005 MFD MINIMUM
C29	N 6272	005 MFD MINIMUM
C30	N 6272	005 MFD MINIMUM
C31	N 6481	130 MMFD 500V 5
C32	N 578	02 MFD 400V 20%
C33	N-6371	002 MFD 600V 10 40%
C34	N 344	0 MFD 00V 20%
C35	N-6656	0 MFD 500
C36	N-6314	4 MFD 50V ELECTROLYTIC
C37	N 6 2	01 MFD MINIMUM
C38	N-6488	250 MMFD 500 20
C39	N 6488	250 MMFD 0
C40	N 344	0 MFD 600
C41	N 6488	100 MMFD 500V
C42	N 456	5 MFD 600
C43	N 6 2	5 MFD MINIMUM
C44	N 4 8	01 MF 600V 20%
C45	N 648	0 MFD MINIMUM
C46	N 3	0 MF 400V
C47	N 48 3	04 MFD 200
C48	N 481	5 MMFD
C49	N 447	005

DIA NO	PART NO	DESCRIPTION
C50		80 MFD 0 ELECTROLYTIC
C51	N 8 3	80 MFD 50V
C52		80 MFD 150V
C53	N 6481	0 MFD MINIMUM
C54	N 185	05 MFD 400V 20%
C55	N-6401	05 ATOR TRANSMITTER AM
C56	N-6272	5 MFD MINIMUM
C57	N 3	1 MFD 200V MINIMUM
C58	N 8400	0 CRYSTAL FM POWER FM
C59	N 6 2	13 MMFD TRIMMER
C60	N 6 2	005 MFD MINIMUM
C61	N 4	1 MFD MINIMUM
R1	N-6272	5 MFD MINIMUM
R2	N 3	1 MFD 200V MINIMUM
R3	N 8400	0 CRYSTAL FM POWER FM
R4	N 6 2	13 MMFD TRIMMER
R5	N 6 2	005 MFD MINIMUM
R6	N 4	1 MFD MINIMUM
R7	N 6311	1 MFD 100
R8	N-6 8	MANG PHONO SWITCH
R9	N-6278	2 GANG CAPACITOR
R10	N-6373	RECORD FM
R11	N-6272	RECORD FM
R12	N-0348	OSCILLATOR COIL FM
R13	N 8346	DISCRIMINATOR COIL FM
R14	N-6344	5 AM
R15	N 6344	2 FM
R16	N 6 4	AND FM
R17	N 4	0
R18	N-6 8	ELEMENT
R19	5	OUTPUT
R20		5 FM
R21	N 6 2	5 MFD MINIMUM
R22	N 4 8	01 MF 600V
R23	N 648	0 MFD MINIMUM
R24	N 3	0 MF 400V
R25	N 48 3	04 MFD 200
R26	N 481	5 MMFD
R27	N 447	005

This receiver is designed to operate over two tuning ranges, the broadcast band which extends from 535 to 1620 Kilocycles (KC) (185 to 560 Meters), and the Frequency Modulation (FM) Band which extends from 87 to 109 Megacycles (MC)

DIAL CALIBRATION (Standard Broadcast Band.) The upper scale is calibrated from 55 to 160 (Standard Broadcast) This band covers all Standard Broadcast frequencies of the United States, Canada, Mexico, Cuba, and many Central and South American Countries Add a zero to figures on the scale to obtain kilocycles
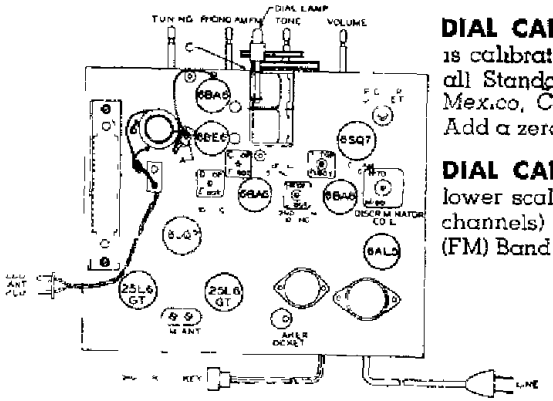
DIAL CALIBRATION (Frequency Modulation Band.) The entire lower scale is calibrated from 88 to 108 Megacycles (201 to 300 FM channels) which covers the entire popular Frequency Modulation (FM) Band