SILVER - MARSHALL, INC.

MODEL 730, 731
MODEL 735 AC
MODEL 735 DC

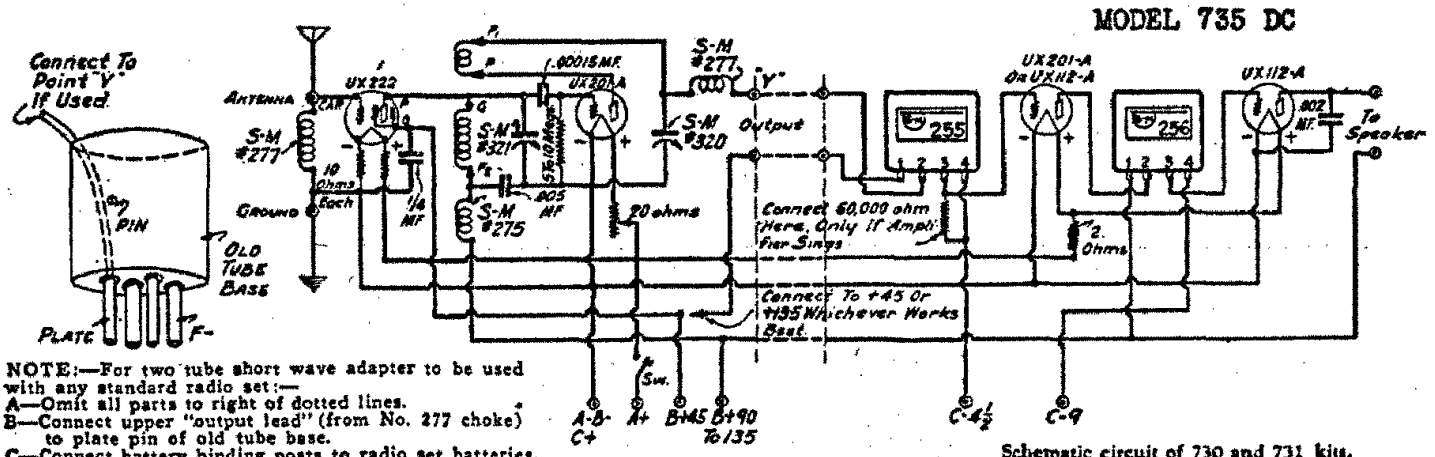

NOTE:—For two tube short wave adapter to be used with any standard radio set:—
A—Omit all parts to right of dotted lines.
B—Connect upper "output lead" (from No. 277 choke) to plate pin of old tube base.
C—Connect battery binding posts to radio set batteries.
D—Insert old tube base adapter in detector socket of regular radio set, which will join the two tube short wave adapter to the audio amplifier of set.

Schematic circuit of 730 and 731 kits, and details of adapter made from an old tube base.

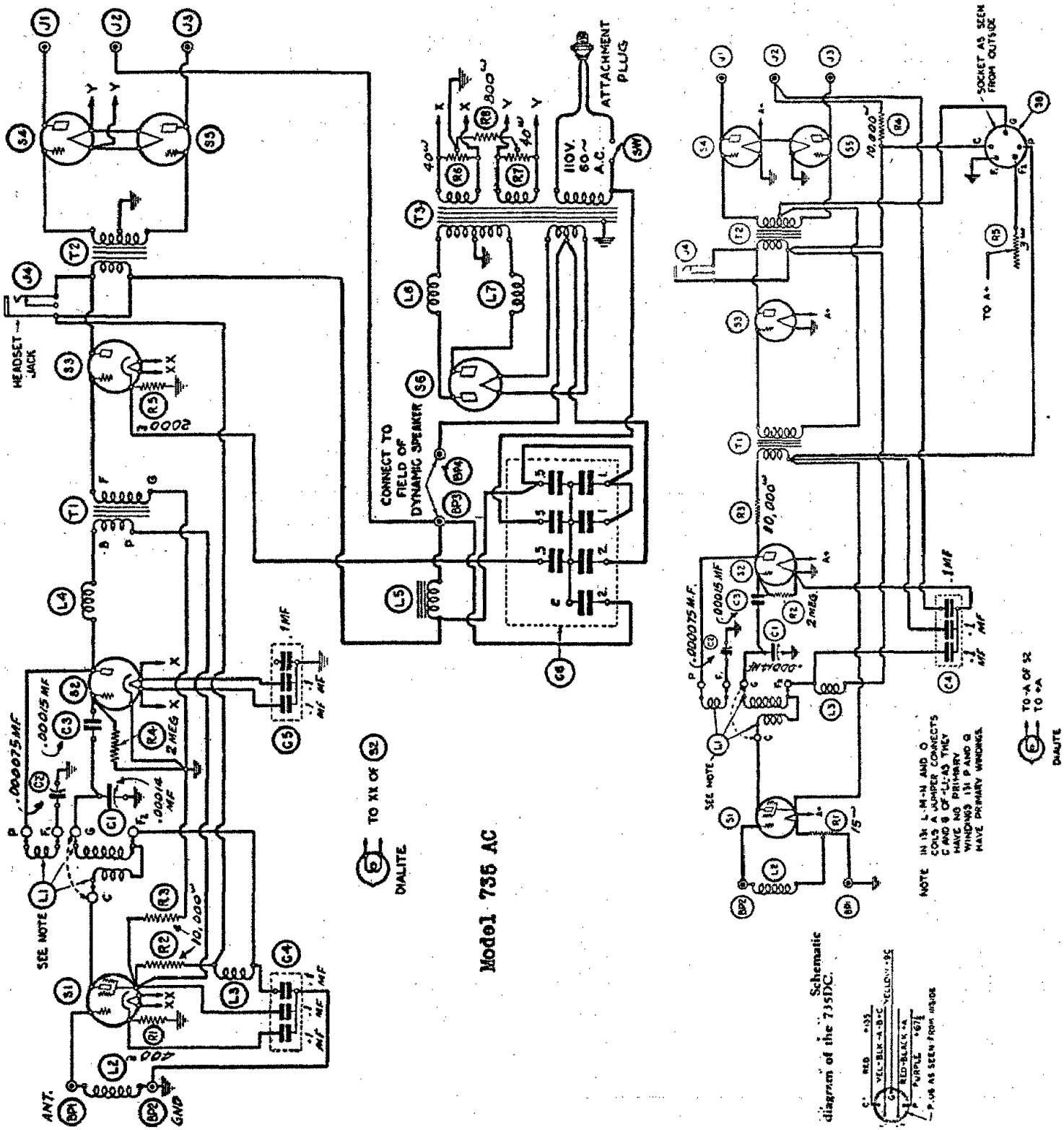

Model 735 AC

Schematic diagram of the 735DC.