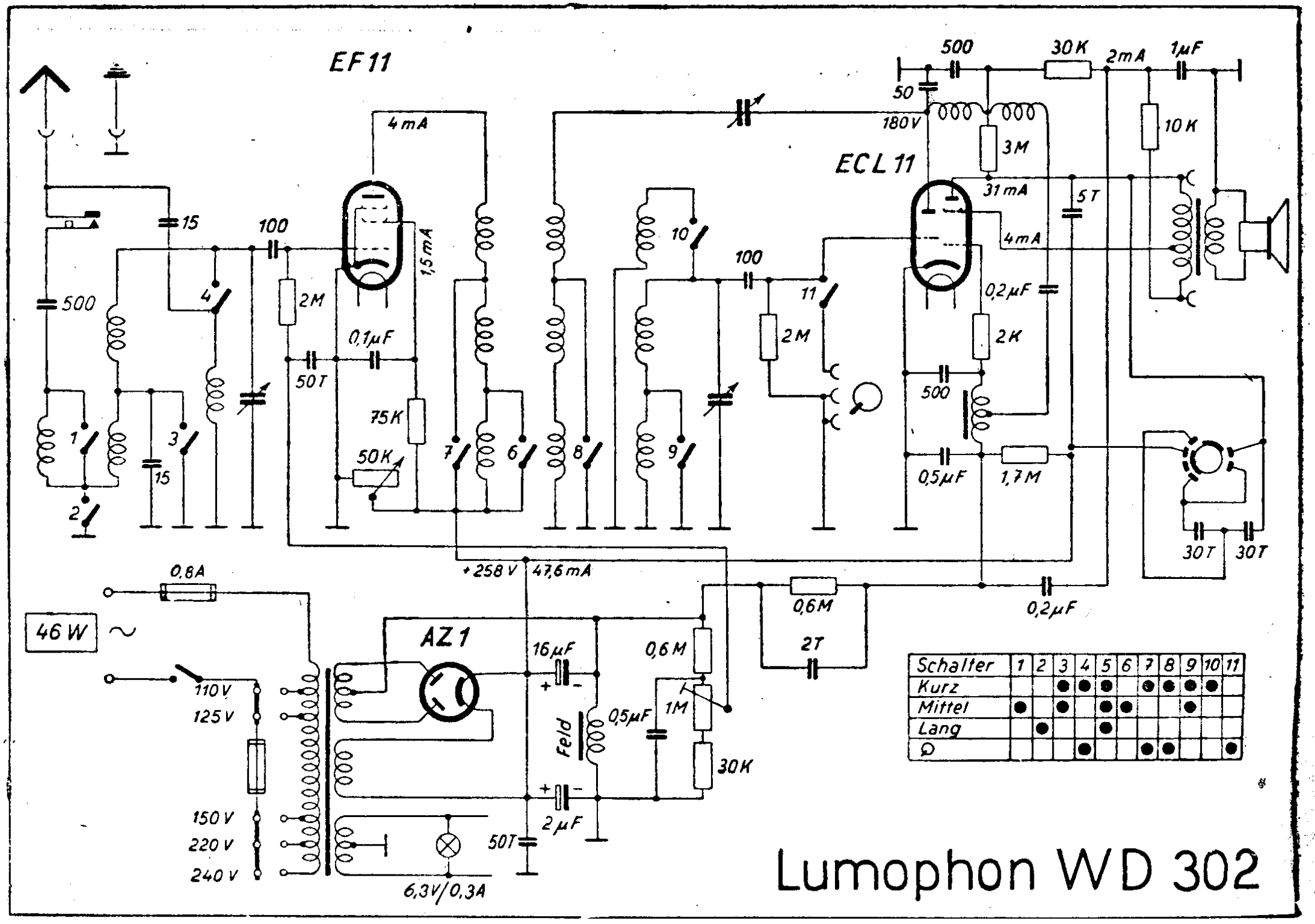

Schalter	1	2	3	4	5	6	7	8	9	10	11
Kurz			●	●	●		●	●	●	●	
Mittel	●		●		●	●			●		
Lang		●			●						
⌕				●			●	●			●