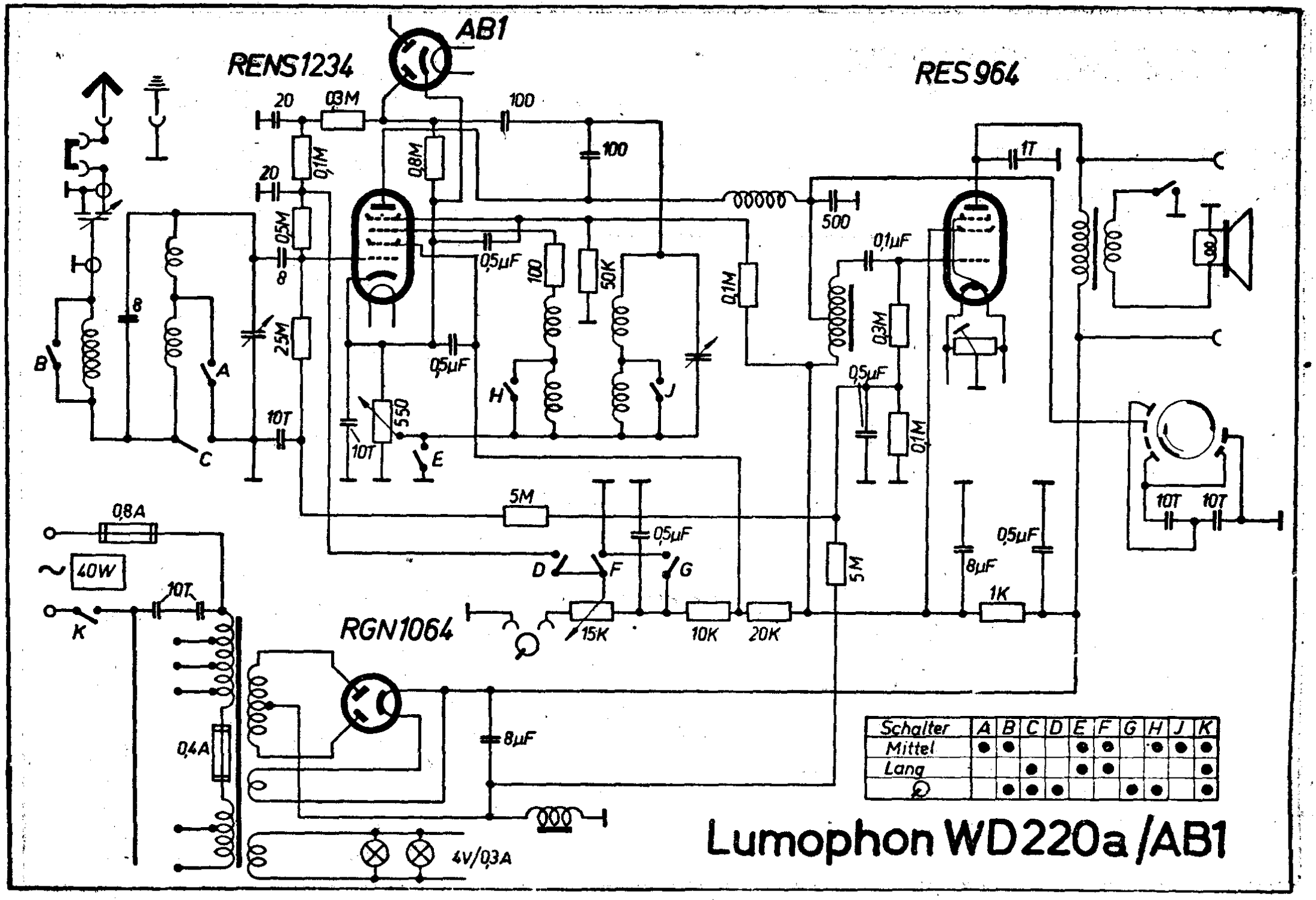

Schalter	A	B	C	D	E	F	G	H	J	K
Mittel	●	●			●	●		●	●	●
Lang			●		●	●				●
⌕		●	●	●			●	●		●

Lumophon WD220a /AB1