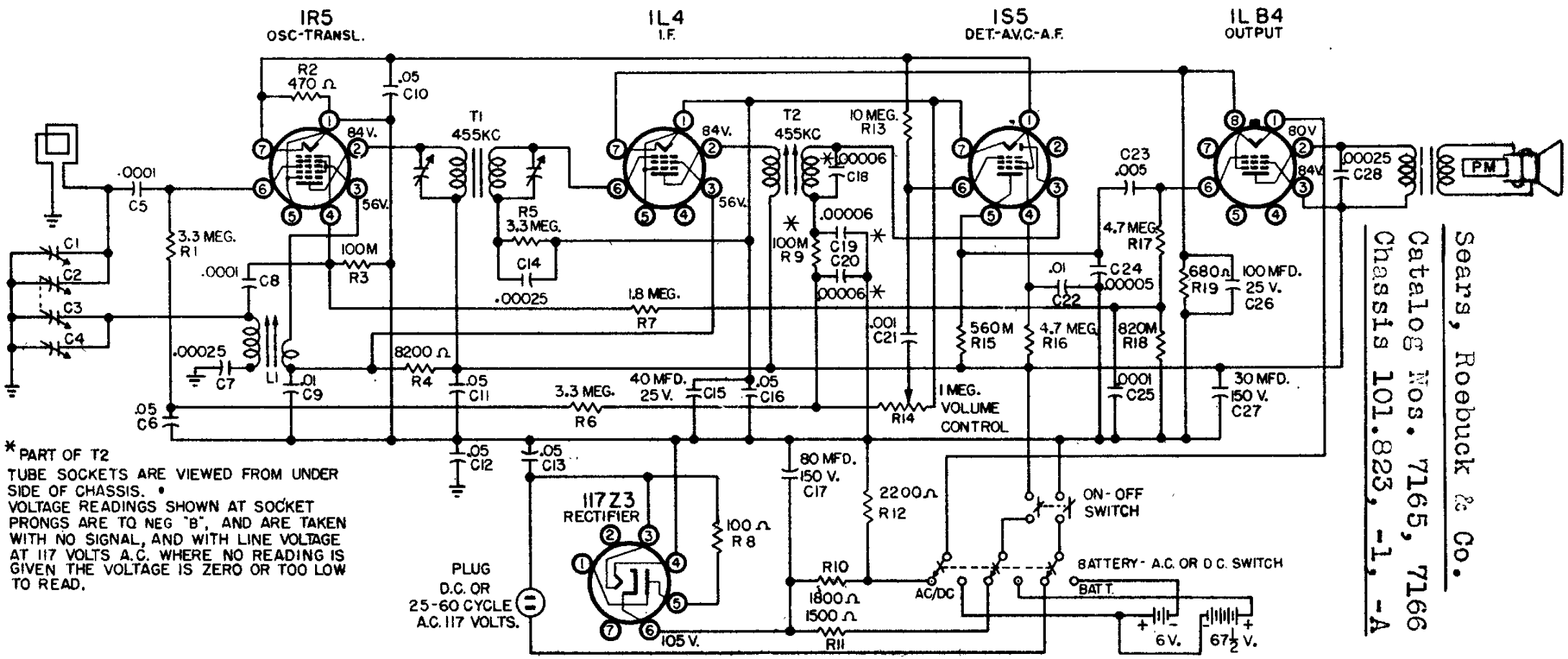

* PART OF T2

TUBE SOCKETS ARE VIEWED FROM UNDER SIDE OF CHASSIS.

VOLTAGE READINGS SHOWN AT SOCKET PRONGS ARE TO NEG "B", AND ARE TAKEN WITH NO SIGNAL, AND WITH LINE VOLTAGE AT 117 VOLTS A.C. WHERE NO READING IS GIVEN THE VOLTAGE IS ZERO OR TOO LOW TO READ.

Sears, Roebuck & Co.
Catalog Nos. 7165, 7166
Chassis 101.823, -1, -A