REGAL ELECTRONICS CORP

MODEL 7162

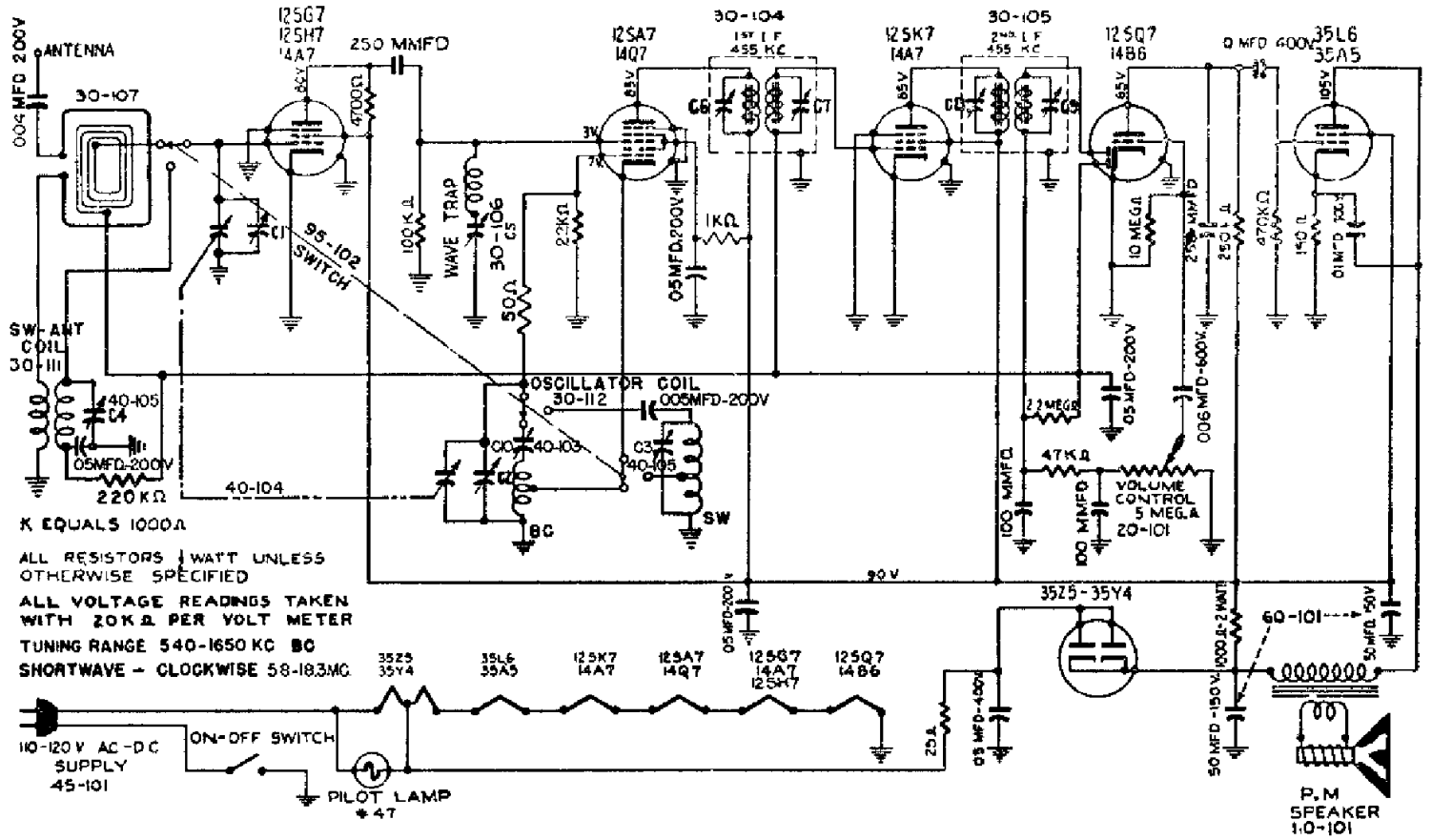

The Model 7162 is a 6 tube 2 band superheterodyne which will give reception over a wide range, including standard broadcast and foreign shortwave. The tuning range of the broadcast frequency is 540 to 1650 kilocycles, or 560 to 182 meters. The short wave frequency is 5.8 to 18.3 megacycles, or 16 to 49 meters, which includes the following: 16, 19, 25, 31, 39 and 49 meter bands.

This radio is designed for convenient use in any location within range of a standard outlet receptacle. It will operate on 105 to 125 volts, 50 to 60 cycles, alternating current, or on 105 to 125 volts direct current.

ELECTRICAL SPECIFICATIONS

The circuit used is a superheterodyne employing 9 tuned circuits for maximum sensitivity and selectivity, with automatic volume control (AVC), beam power output system, IF wave trap, and a URF stage (untuned radio frequency stage). The tube complement consists of (1) 12SG7, 12SH7, or 12SK7 in the RF stage, (1) 12SA7 as a converter, (1) 12SK7 if amplifier, (1) 12SQ7 detector AVC and first audio amplifier, (1) 35L6 or 50L6 beam power amplifier and (1) 35Z5 rectifier.

Antenna

The loop Antenna in this receiver will give good reception under normal conditions. It is directional and the best position may be obtained by slowly rotating the receiver in different directions until the signal volume is at its strongest. For better results on weak signals and for foreign reception connect a good outside Antenna. A connection is provided at the rear of the receiver for connecting an outdoor Antenna.