SENTINEL RADIO CORP.
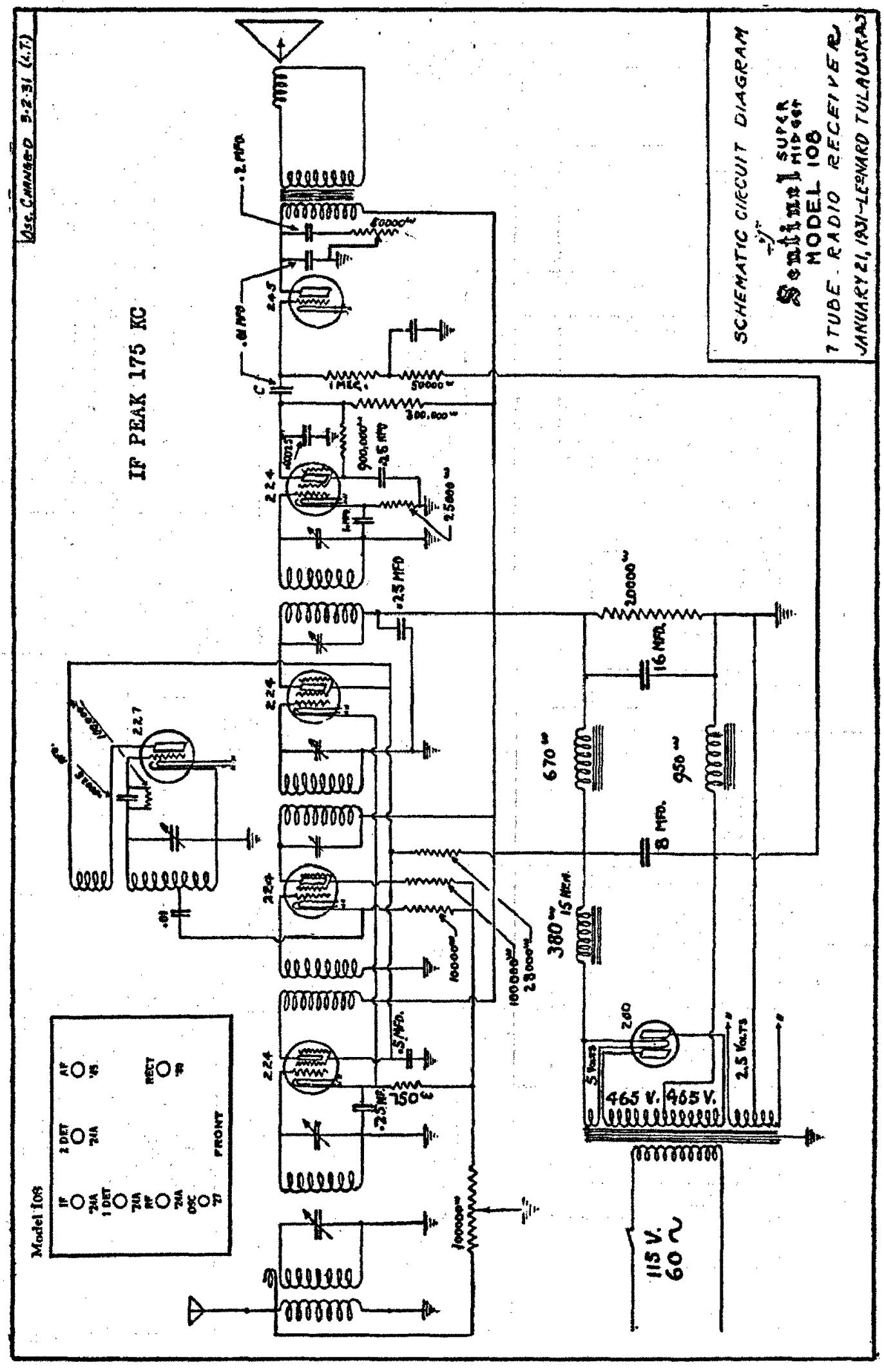
MODEL 108