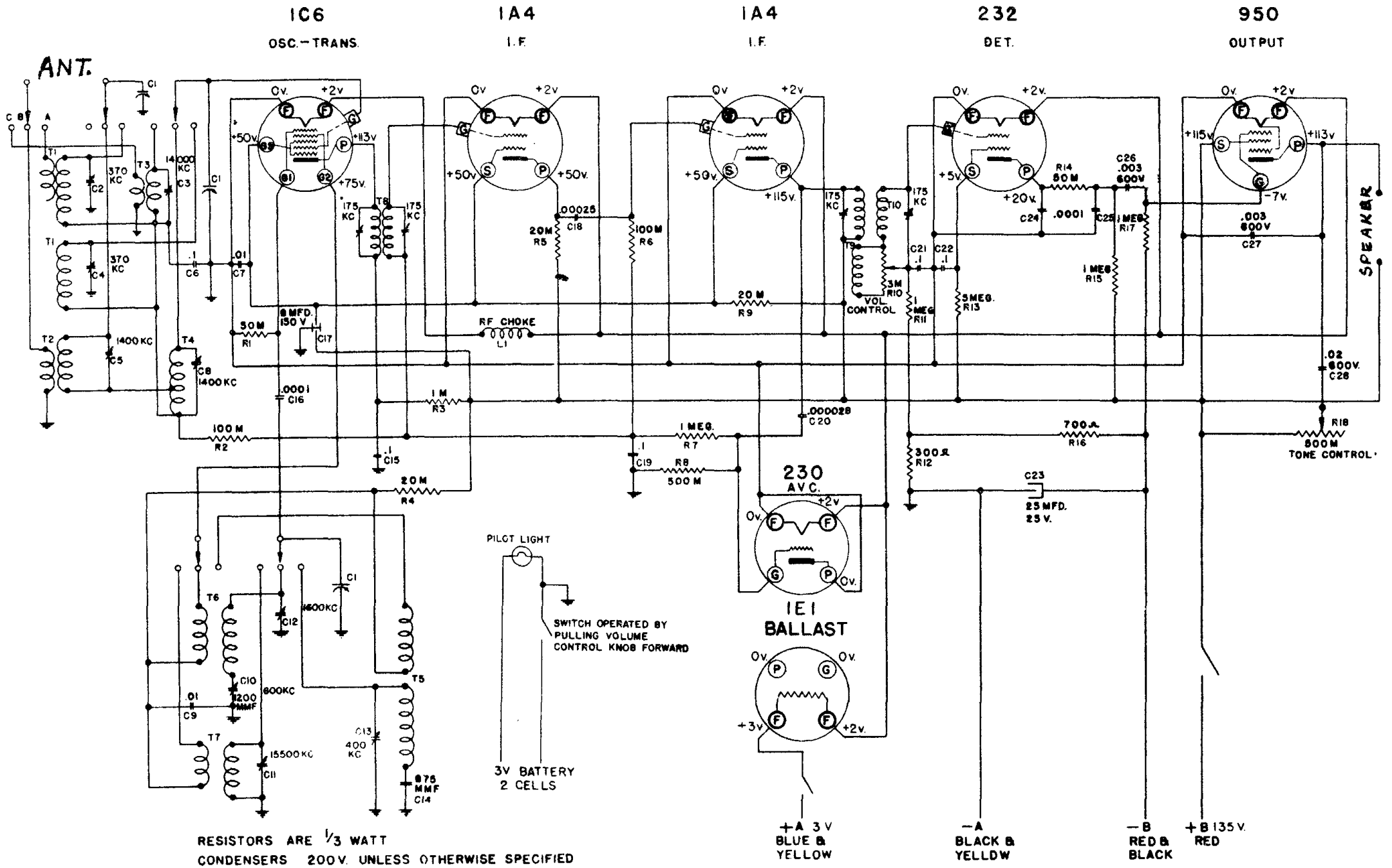

RESISTORS ARE 1/3 WATT

CONDENSERS 200V. UNLESS OTHERWISE SPECIFIED

VOLTAGE READINGS ARE TAKEN FROM CHASSIS TO INDICATED PRONG OF EACH SOCKET. ALIGNMENT IS TO BE MADE AT FREQUENCIES SHOWN AT EACH TRIMMER.
WHERE NO VALUE IS SHOWN, READING IS VERY LOW BECAUSE OF HIGH SERIES RESISTANCE IN CIRCUIT.
TUBE SOCKETS ARE VIEWED FROM UNDER SIDE OF CHASSIS.

SCHEMATIC - MODELS 1923-1933-1983-1993

Sears, Roebuck & Co.