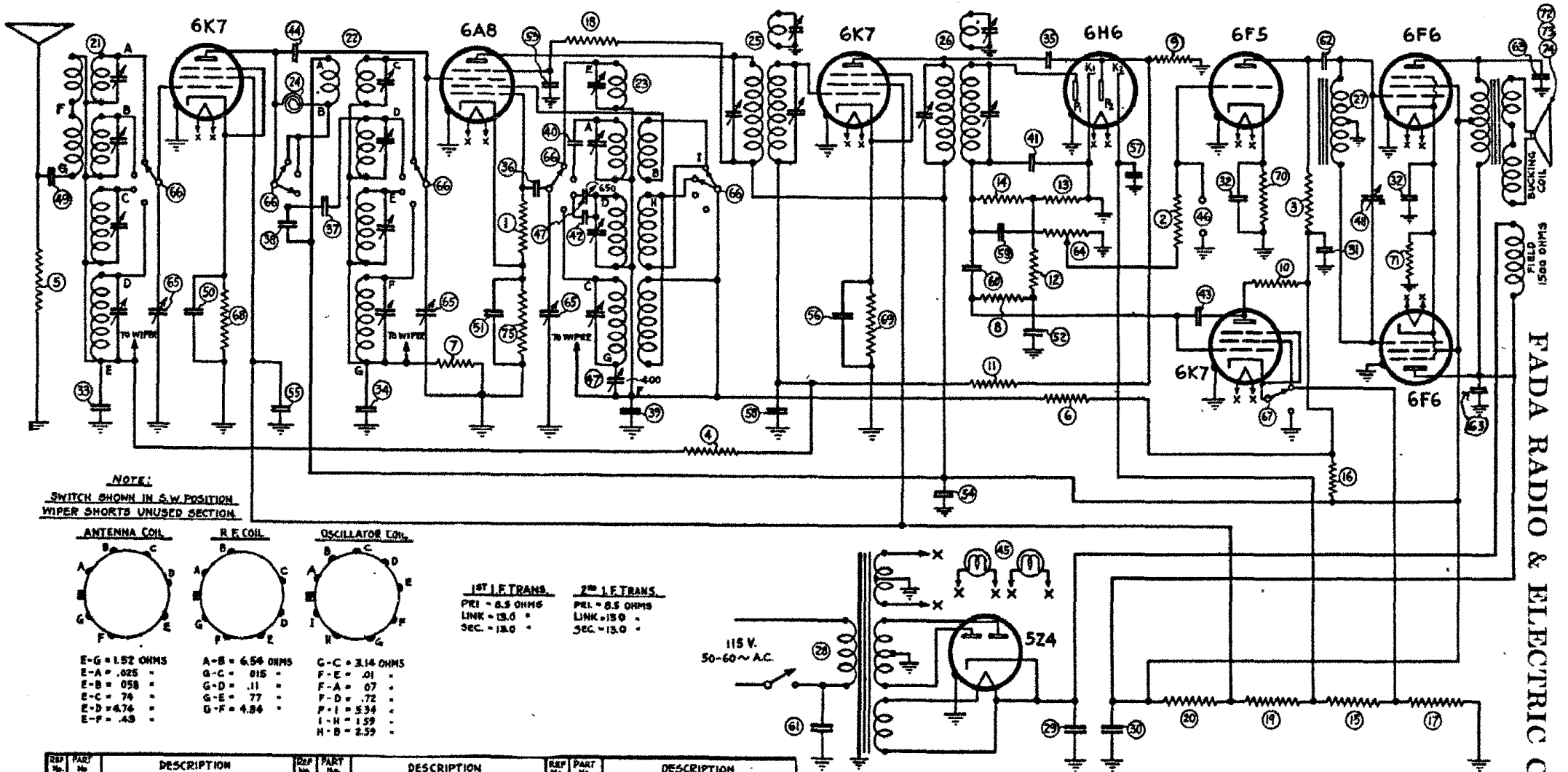

NOTE:
SWITCH SHOWN IN S.W. POSITION
WIPER SHORTS UNUSED SECTION

ANTENNA COIL

E-G = 1.52 OHMS
E-A = .025 "
E-B = 058 "
E-C = 74 "
E-D = 4.74 "
E-F = .43 "

R.F. COIL

A-B = 6.54 OHMS
G-C = 015 "
G-D = .11 "
G-E = 77 "
G-F = 4.84 "

OSCILLATOR COIL

G-C = 3.14 OHMS
F-E = .01 "
F-A = 07 "
F-D = .72 "
F-I = 5.34 "
I-H = 1.59 "
H-B = 2.59 "

1ST I.F. TRANS.
PRI = 8.5 OHMS
LINK = 13.0 "
SEC. = 13.0 "

2ND I.F. TRANS.
PRI. = 8.5 OHMS
LINK = 13.0 "
SEC. = 13.0 "

REF No.	PART No.	DESCRIPTION	REF No.	PART No.	DESCRIPTION	REF No.	PART No.	DESCRIPTION	REF No.	PART No.	DESCRIPTION
1	30.26	CARB. RES. - 50,000 OHMS - 1/2 W ±20%	23	4456	OSCILLATOR COIL	45	120.3	PILOT LIGHTS 6-8. V - .15 V.	67	45.16	SNAP SWITCH
2	30.26	" " 50,000 " " " " "	24	3216	CHOKE COIL	46	125.1	PHONO JACK	68	130.5	WIRE RES - 250 OHMS 1/2 FX.
3	30.26	" " 50,000 " " " " "	25	4489C	1ST I.F. COIL	47	25.9	PADDING COND. - DUAL - 400-650 MMF	69	130.6	" " 500 " " "
4	30.20	" " 250,000 " " " " "	26	4490C	2ND I.F. COIL	48	55.2	TONE CONTROL	70	130.3	" " 1000 " " "
5	30.3	" " 50,000 " " " " 10 "	27	40.7	AUDIO CHOKE COIL	49	10.6	TUBULAR COND. - .002 MF. - 400 V	71	130.9	" " 315 " 1 W
6	30.2	" " 10,000 " " " " "	28	40.25	POWER TRANS.	50	10.5	" " .05 " - 200 -	72	105.7	SPEAKER - MODEL 190 T
7	30.2	" " 10,000 " " " " "	29	20.7	ELECTRO COND - 12 MFD. - 550 W.V	51	10.5	" " .05 " " "	73	105.17	" " 190 C
8	30.22	" " 1 MEG " " " 20 "	30	20.4	" " 8 " 450 "	52	10.5	" " .05 " " "	74	105.12	" " 190 CK
9	30.22	" " 1 " " " " " "	31	20.34	" " 6 " 450. "	53	10.9	" " .1 " 400 "	75	130.5	WIRE RES - 250 OHMS 1/2 FX
10	30.22	" " 1 " " " " " "	32	20.6	" DUAL " 4-4 " 25-25 "	54	10.9	" " .1 " " "			
11	30.21	" " 2 " " " " " "	33	15.5	MICA COND. - .002 MF ± 3%	55	10.9	" " .1 " " "			
12	30.23	" " 500,000 " " " " "	34	15.5	" " .002 " " " "	56	10.2	" " .1 " 200 "			
13	30.8	" " 100,000 " " " 10 "	35	15.3	" " .0001 " " 10 "	57	10.2	" " .1 " " "			
14	30.40	" " 150,000 " " " " "	36	15.3	" " .0001 " " " "	58	10.26	" " .02 " " "			
15	30.1	" " 5,000 " " " " "	37	15.14	" " 5. MMF ± 1/2 MMF	59	10.4	" " .01 " " "			
16	30.1	" " 5,000 " " " " "	38	15.23	" " 70 " ± 5%	60	10.4	" " .01 " " "			
17	30.15	" " 2,000 " " " " "	39	15.25	" " .0027 MF - 3 "	61	10.7	" " .05 " 400 "			
18	30.14	" " 50,000 " 1/2 " " "	40	15.24	" " .00135 " " " "	62	10.7	" " .05 " " "			
19	30.41	" " 25,000 " 1/2 " " "	41		" " .0005 " " 10 "	63	10.17	" DUAL " .001 " 600 "			
20	30.33	" " 25,000 " 1 " " "	42	15.2	" " .0005 " " " "	64	50.17	VOLUME CONTROL - 1 MEG.			
21	4648	ANTENNA COIL	43	15.13	" " .00075 " " " "	65	25.46	VARIABLE COND			
22	4649	R.F. COIL	44	15.16	" " 3. MMF ± 1/2 MMF	66	45.16	BAND SWITCH			

NOTE: ⏚ = CHASSIS

I.F. 486 K.C.

FADA RADIO & ELECTRIC CO. LONG ISLAND CITY, N.Y.	
MODEL 190	
DRAWN BY JP	DATE 6-29-35
CHECKED BY RLW	APPROVED RPS

FADA RADIO & ELECTRIC CORP.

MODEL 190
Schematic