NOTE: In some receivers 6D6 is used instead of 6K7 and a 42 is used in place of the 6F6.

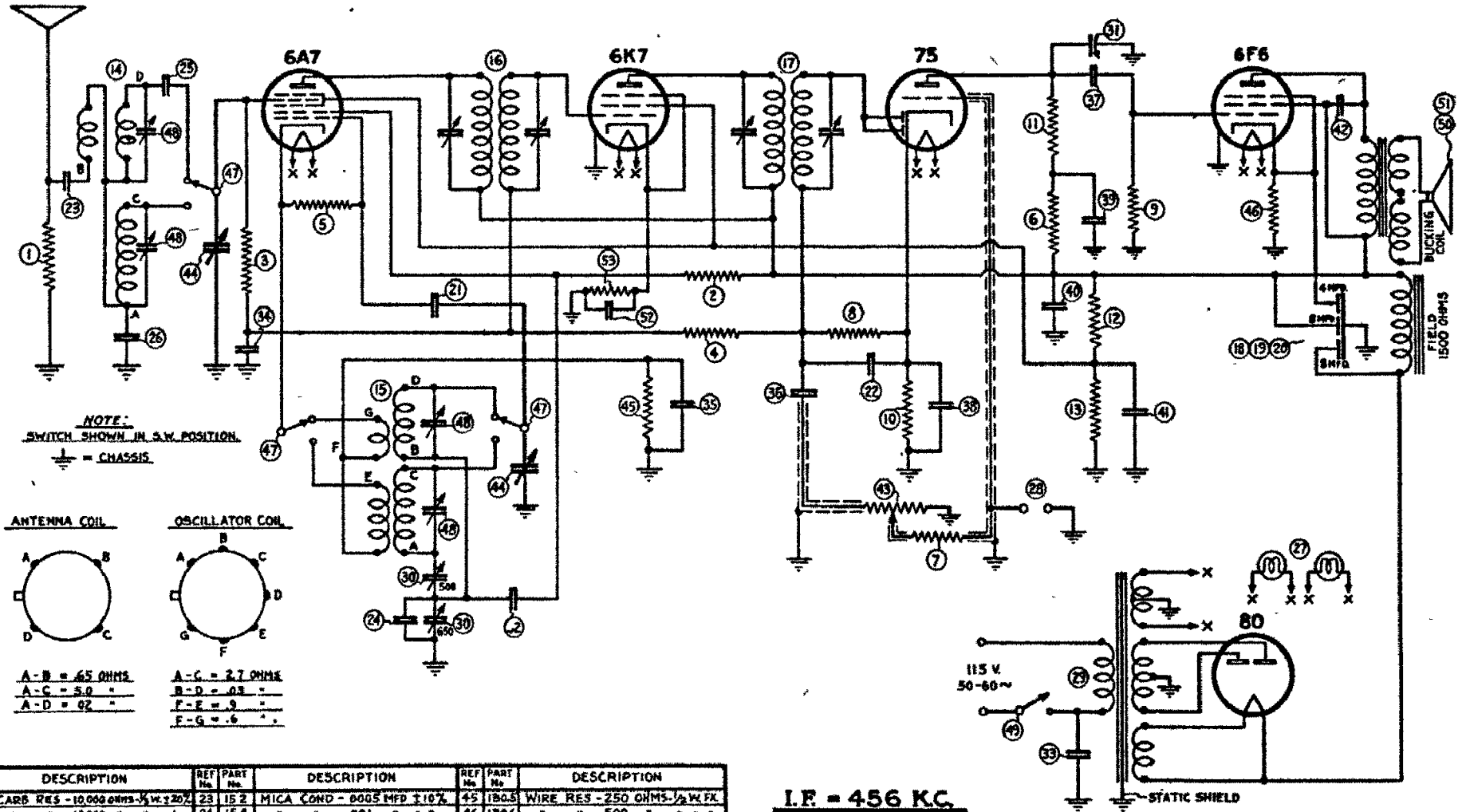

FADA RADIO & ELECTRIC CORP.

MODEL 150 (2 Types)
Schematic

REF No.	PART No.	DESCRIPTION	REF No.	PART No.	DESCRIPTION	REF No.	PART No.	DESCRIPTION
1	30.31	CARB RES - 10,000 OHMS - ½ W. ± 20%	23	15.2	MICA COND - .0005 MFD ± 10%	45	130.5	WIRE RES - 250 OHMS - ½ W. FX.
2	30.31	" " 10,000 " " " "	24	15.4	" " .001 " " "	46	130.6	" " 500 " " " "
3	30.22	" " 1 MEG. " " " "	25	15.5	" " .002 " " 3%	47	45.1	BAND SWITCH
4	30.22	" " 1 " " " " "	26	15.6	" " .0025 " " "	48		MIN ADJ ON COILS
5	30.3	" " 50,000 " " " 10%	27	120.3	PILOT LIGHTS - 6-8 V .15 A	49		ON-OFF SW ON VOL. CONT (49)
6	30.26	" " 50,000 " " " 20%	28	125.1	PHONO JACK	50	105.4	SPEAKER - (150 T)
7	30.26	" " 50,000 " " " "	29	40.4	POWER TRANSFORMER	51	105.20	" (150 C)
8	30.23	" " 500,000 " " " "	30	25.1	PADDING COND - 650-500 MMF	52	10.5	TUBULAR COND. - .05 MFD - 200 V
9	30.23	" " 500,000 " " " "	31	55.1	TONE CONTROL	53	130.2	WIRE RES. - 350 OHMS - ½ W. FX.
10	30.12	" " 4,000 " " " 10%	32	10.7	TUBULAR COND. - .05 MFD - 400 V			
11	30.20	" " 250,000 " " " 20%	33	10.7	" " .05 " " "			
12	30.13	" " 20,000 " 1 " 10%	34	10.5	" " .05 " 200 "			
13	30.14	" " 50,000 " ½ " "	35	10.5	" " .05 " " "			
14	2026	ANTENNA COIL	36	10.4	.01 " " "			
15	3116	OSCILLATOR "	37	10.10	" " .01 " 400 "			
16	3879	1ST I F "	38	10.1	" " .35 " 200 "			
17	3880	2ND I F "	39	10.5	" " .1 " 400 "			
18	20.8	ELECTRO COND BLOCK - 8 MFD 450 WV	40	10.9	" " .1 " " "			
19	20.8	" " " 8 " 450 " "	41	10.9	" " .1 " " "			
20	20.8	" " " 4 " 25 " "	42	10.3	" " .006 " " "			
21	15.3	MICA COND - .0001 MFD. ± 10%	43	50.1	VOLUME CONTROL - ½ MEG			
22	15.1	" " .00025 " " "	44	25.20N	VARIABLE COND			

I.F. = 456 K.C.

1ST I.F. TRANS.	2ND I.F. TRANS.
PRI. - 14.5 OHMS	PRI. - 14.5 OHMS
SEC. - 14.5 "	SEC. - 14.5 "

FADA RADIO & ELECTRIC CO. LONG ISLAND CITY, N.Y.	
MODEL 150	
DRAWN BY JP	DATE 7-10-35
CHECKED BY JB	APP. EPC

NOTE: In sets using 6D6, the cathode of 6D6 joins resistor 45 and units 52 and 53 are not used. In these receivers 35 is .01 MFD. and 36 is .25 MFD.