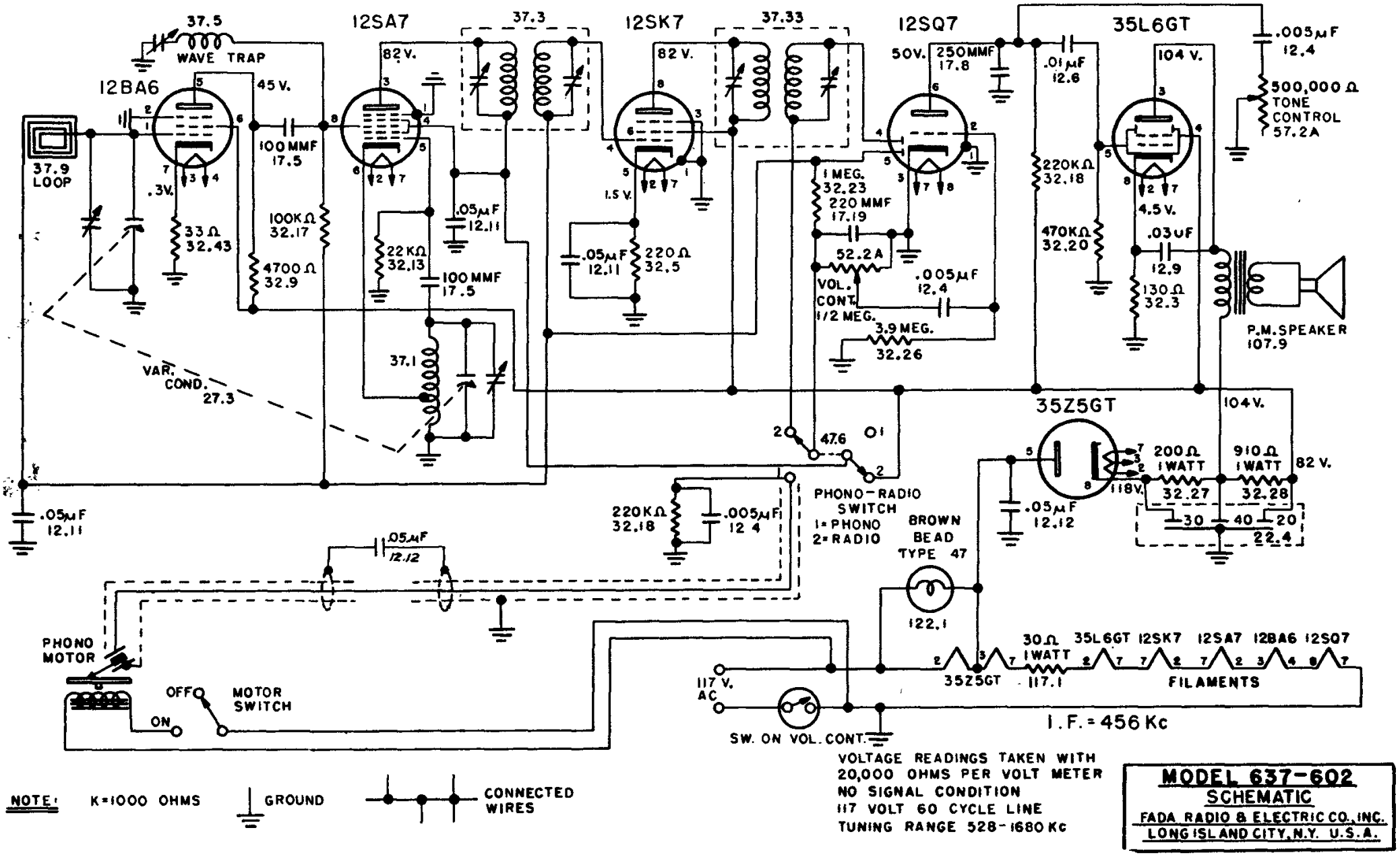

Power supply 105-125 V 60 cycles A.C. only

Power consumption 45 Watts Total

Frequency Range 1680-528 KC

I.F. Circuits 456 KC

FADA RADIO & ELECTRIC CO., Inc.