FARNSWORTH TELEV. & RADIO CORP.

CT-61 - CT-62 - CK-66 SINGLE BAND

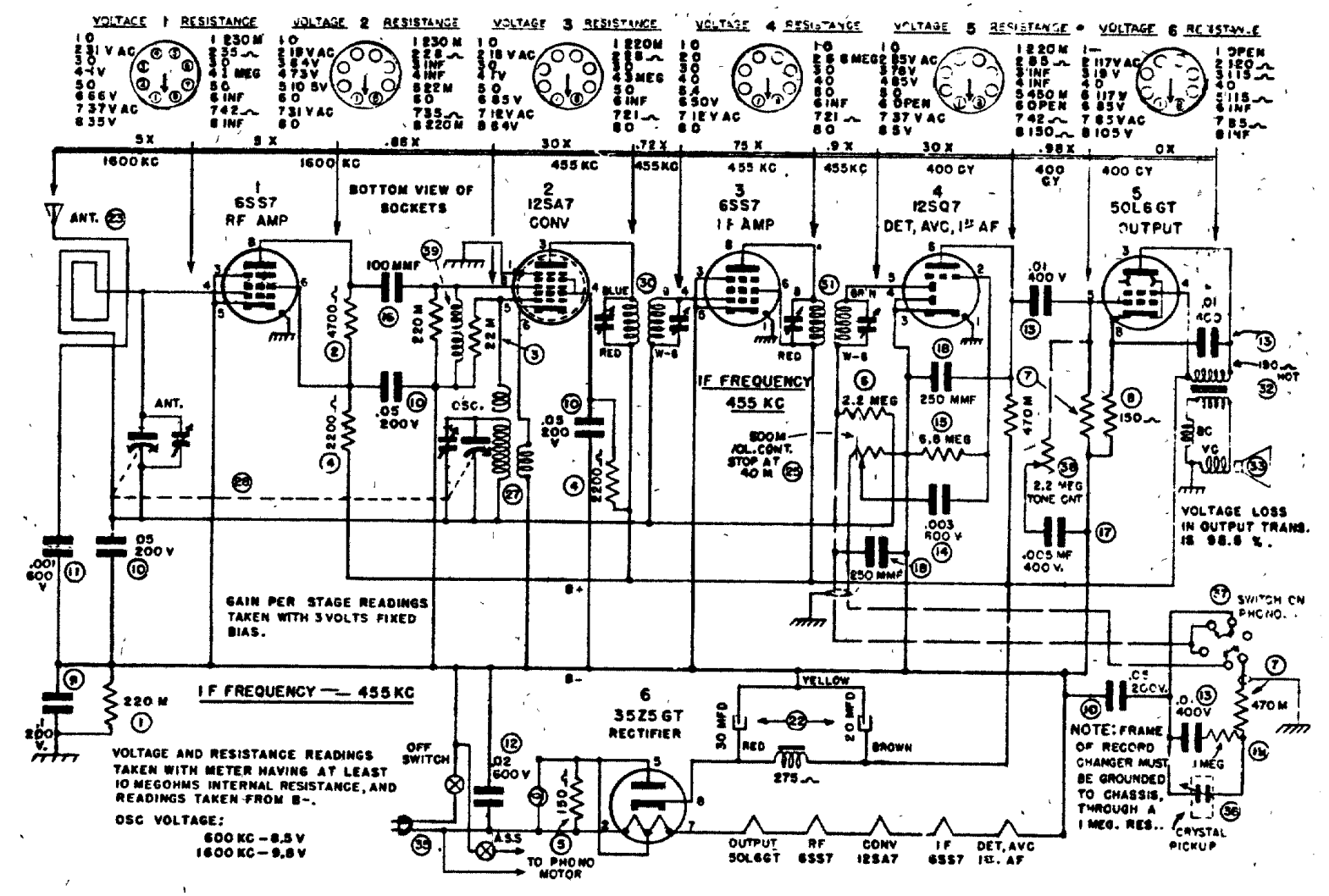
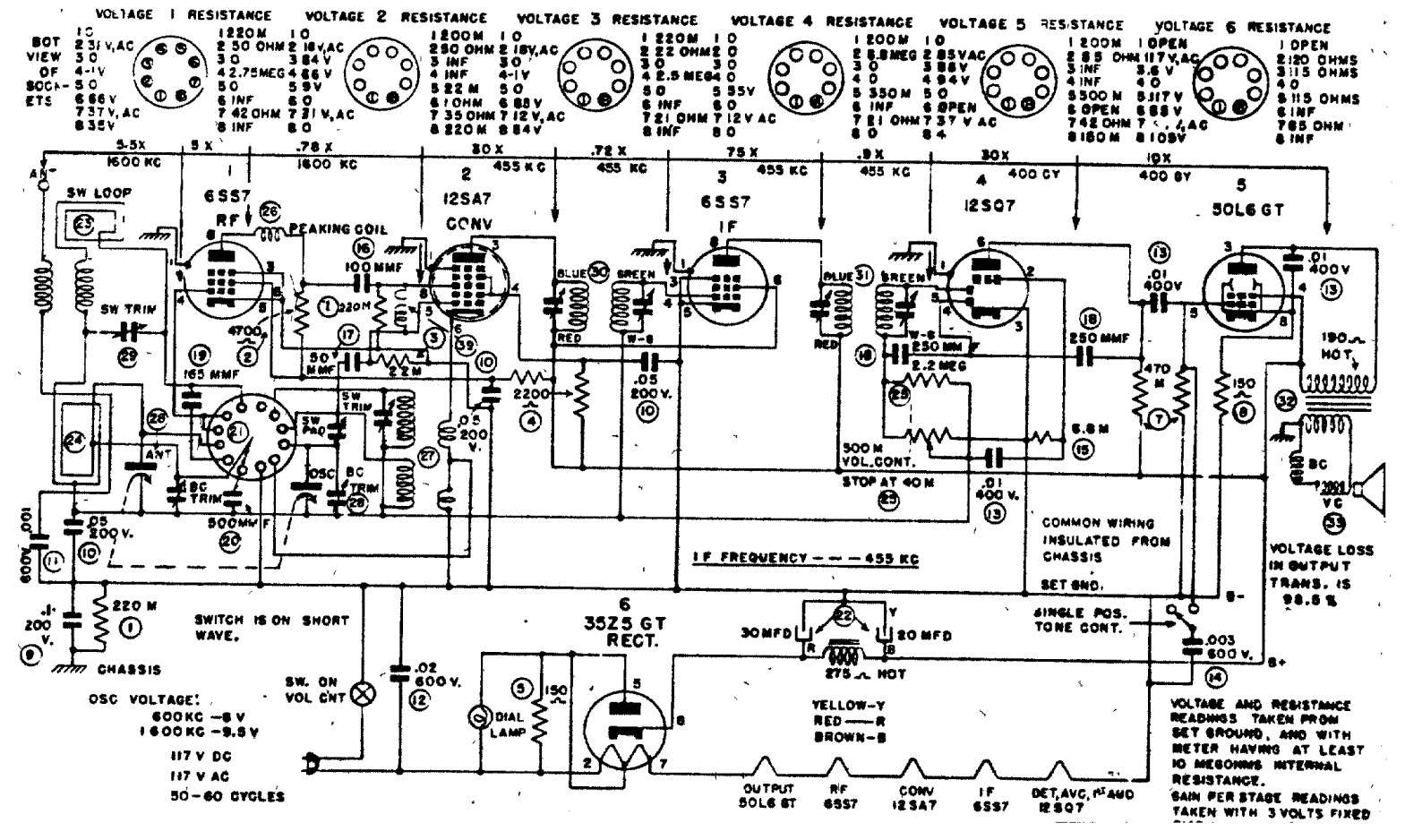
CT-63 - CT-64 - DUAL BAND