MAJESTIC RADIO & TELEV. CO.

MODELS 65, 66, 650
Schematic
Parts List

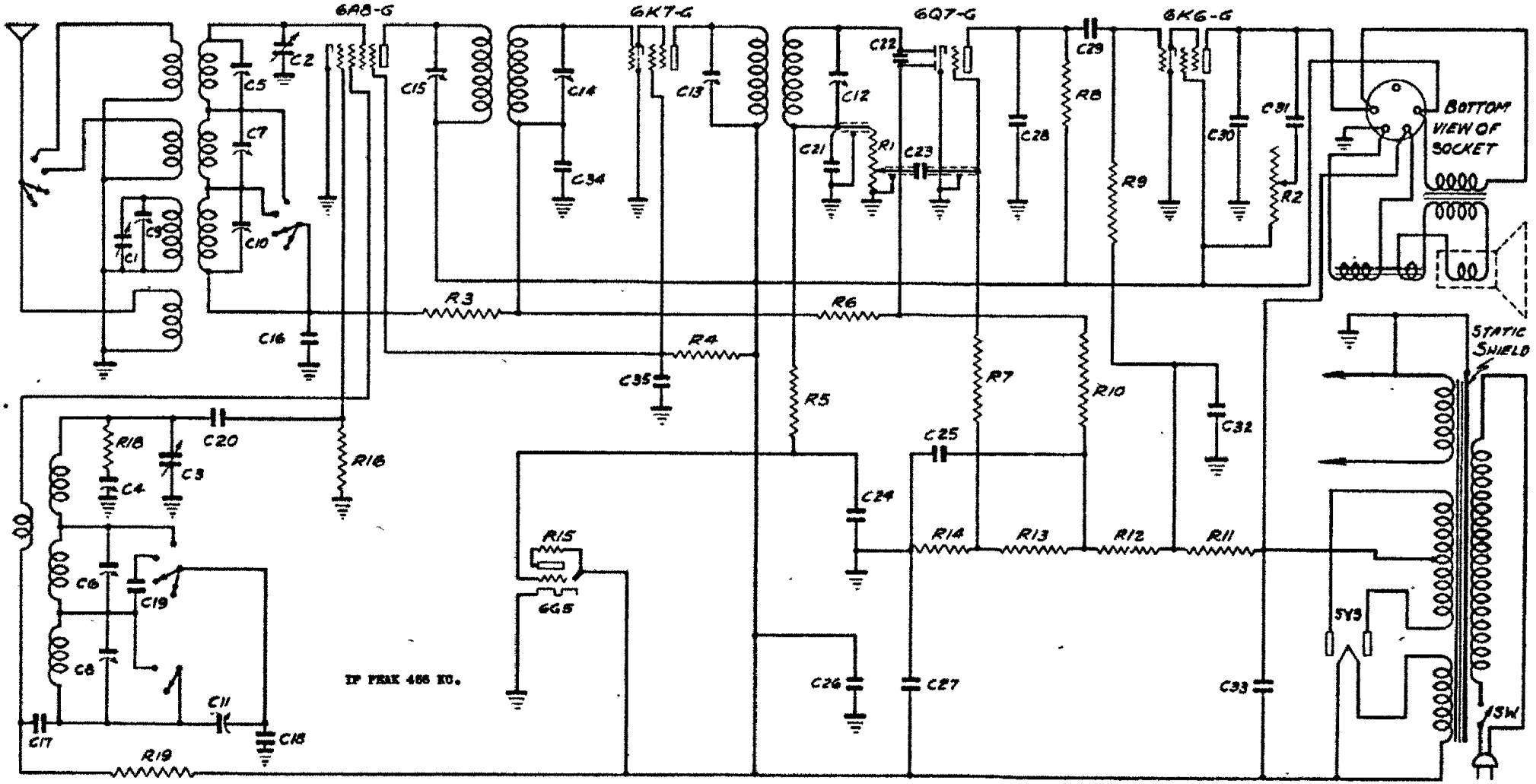

C1 C2 C3	B 16461-3	CONDENSER VARIABLE GANG			
C4 C6 C8	A 16473	CONDENSER TRIMMER	3-30 MMF.	TRIPLE STRIP BAKELITE	
C5 C9 C10	A 16474	CONDENSER TRIMMER	3-30 MMF.	CERAMIC BASE	
C7	A 15246-2	CONDENSER TRIMMER	3-30 MMF	BAKELITE BASE	
C11	A 16472	CONDENSER VARIABLE	PADDER	340 MMF - 940 MMF.	
C33	B 16466	CONDENSER WET ELECTROLYTIC	16 MMF	- 350 V.	
C29	B 16467	CONDENSER WET ELECTROLYTIC	8 MMF	- 250 V.	
C28	15918	CONDENSER MICA	100 MMF	± 20%	O
C21	15928	CONDENSER MICA	260 MMF	± 20%	C
C20 C22	15929	CONDENSER MICA	50 MMF	± 20%	O
C17	15930	CONDENSER MICA	2000 MMF	± 20%	W
C18	15931	CONDENSER MICA	4800 MMF	± 5%	W
C19	15932	CONDENSER MICA	1760 MMF	± 5%	W
C26	15750	CONDENSER TUBULAR	.25 MF	400 V.	
C16 C34	15750	CONDENSER TUBULAR	.05 MF	200 V	
C23 C29	15754	CONDENSER TUBULAR	.01 MF	400 V	
C35	15757	CONDENSER TUBULAR	.1 MF	400 V.	
C25	15761	CONDENSER TUBULAR	.1 MF	200 V.	
C24	15763	CONDENSER TUBULAR	.01 MF	200 V.	
C31	15764	CONDENSER TUBULAR	.03 MF	400 V	
C32	15770	CONDENSER TUBULAR	2 MF	200 V.	
C30	15771	CONDENSER TUBULAR	.004 MF	600 V.	
R2	B 16540-2	CONTROL TONE	150 M Ω.		
R1	B 16542-2	CONTROL VOLUME AND LINE SWITCH	1 MEGOHM		
R4	15501	RESISTOR CARBON	25 M Ω	1 W	± 20%
R8	15512	RESISTOR CARBON	250 M Ω	1/4 W	± 20%
R3	15515	RESISTOR CARBON	100 M Ω	1/4 W	± 20%
R5 R6 R10 R15	15519	RESISTOR CARBON	1 MEGOHM	1/4 W	± 20%
R7	15520	RESISTOR CARBON	500 M Ω	1/4 W	± 20%
R9	15516	RESISTOR CARBON	50 M Ω	1/4 W	± 20%
R13 R14	15557	RESISTOR CARBON	20 M Ω	1/4 W	± 10%
R19	15558	RESISTOR CARBON	10 M Ω	1/2 W	± 20%
R7	15559	RESISTOR CARBON	5 MEGOHM	1/4 W	± 20%
R12	15402	RESISTOR CARBON	250 M Ω	1/4 W	± 10%
R11	15403	RESISTOR CARBON	900 M Ω	1/4 W	± 10%
R16	3520	#38 D.C.C. MANGANIN WIRE			