GRISBY-GRUNOW
MAJESTIC
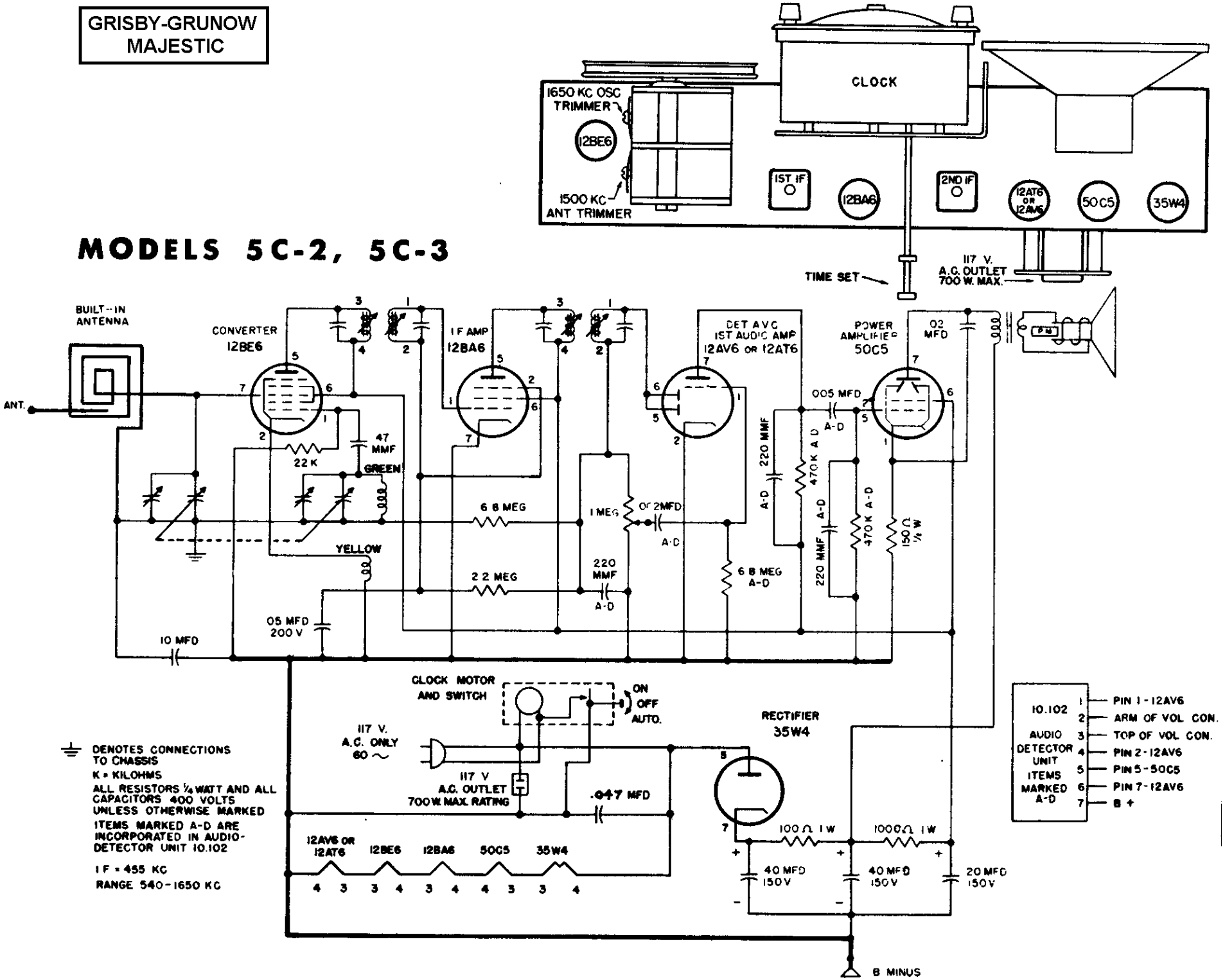
MODELS 5C-2, 5C-3