CHASSIS 90-B

Models 90, 91, 93

GRISBY-GRUNOW
MAJESTIC

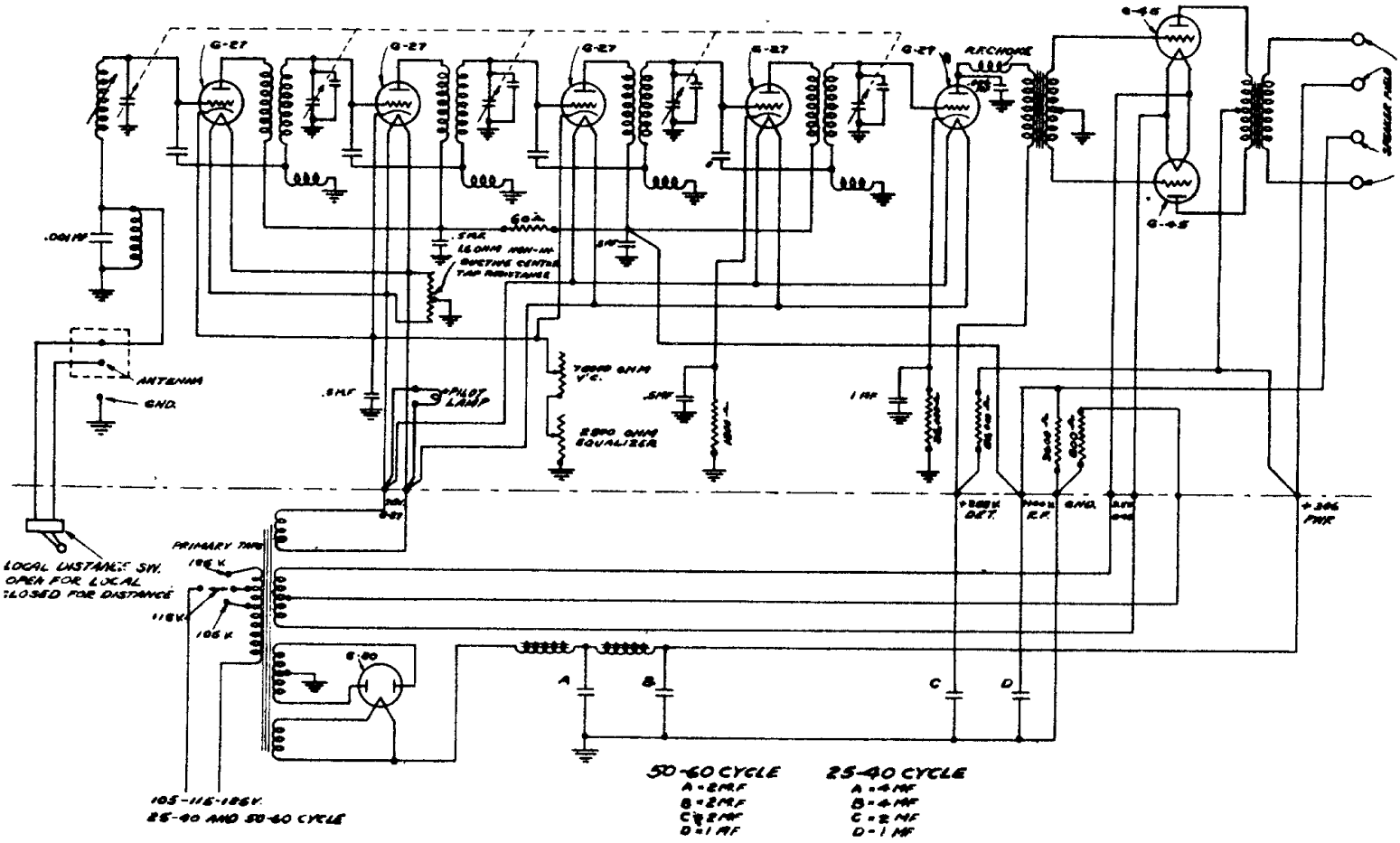

ANTENNA SWITCH

To prevent distortion of tone from close-by powerful transmitters on moderately long antenna, snap switch to "Local" position. Use "Distance" position for stations with less powerful reception.

ADJUSTMENT FOR LINE VOLTAGE

On the left side, directly in front of the G-80 Socket, you will note a small plate. Determine with A. C. Voltmeter or from local power company the average line voltage.

Upon removing the adjustment plate, you will find three taps, marked 105 Volts, 115 Volts and 125 Volts.

TABLE OF VOLTAGES

The voltage readings given below were taken with the receiver turned to 550 kilocycles, and the volume control set at maximum. When taking comparative readings, be certain that receiver is tuned to 550 kilocycles and volume control is set at maximum.

Tube Purpose	Type	Filament Voltage	Plate Voltage	Grid Bias Voltage	Cathode Volts	Normal Plate Milli-amperes
1st R. F.	G-27	2.35	130	8	8	5.5
2nd R. F.	G-27	2.35	130	8	8	5.5
3rd R. F.	G-27	2.35	130	8	8	5.5
4th R. F.	G-27	2.35	130	9	9	5.0
Detector	G-27	2.35	230	25	25	.8
Power	G-45	2.45	250	50	..	32
Power	G-45	2.45	250	50	..	32
Rectifying	G-80	...	...	..	..	..

Line Voltage 115 A. C. on 115 volt tap.

THE CIRCUIT

The T.R.F. balanced circuit is employed with a single control, five gang condenser. The detector output is fed directly to the push-pull audio stage. The selectivity control or trimmer functions by varying the inductance of the antenna input coil and permits adjustin the input circuit to exact resonance with the other turned circuits.

The R. F. Unit assembly (No. 1434) includes the radio frequency transformers with shields, the R. F. Sockets, the balancing condensers and the radio frequency, cathode and plate By-Pass Condensers. The terminal strip includes one 800 Ohm, one 1,800 Ohm and one 50,000 Ohm Resistor, being the bias resistors of the Power Tubes, the 4th R.F. Tube and the Detector Plate resistance respectively.

POWER SUPPLY

Composed of Power Transformer, a Choke Unit and Condenser Bank for the filter system. The resistors (800 and 3,600 Ohm) are placed on terminal strip. A Type G-80 Rectifying tube is used.