MODEL P
MODEL 210 Converter

INTERNATIONAL RADIO CORP.

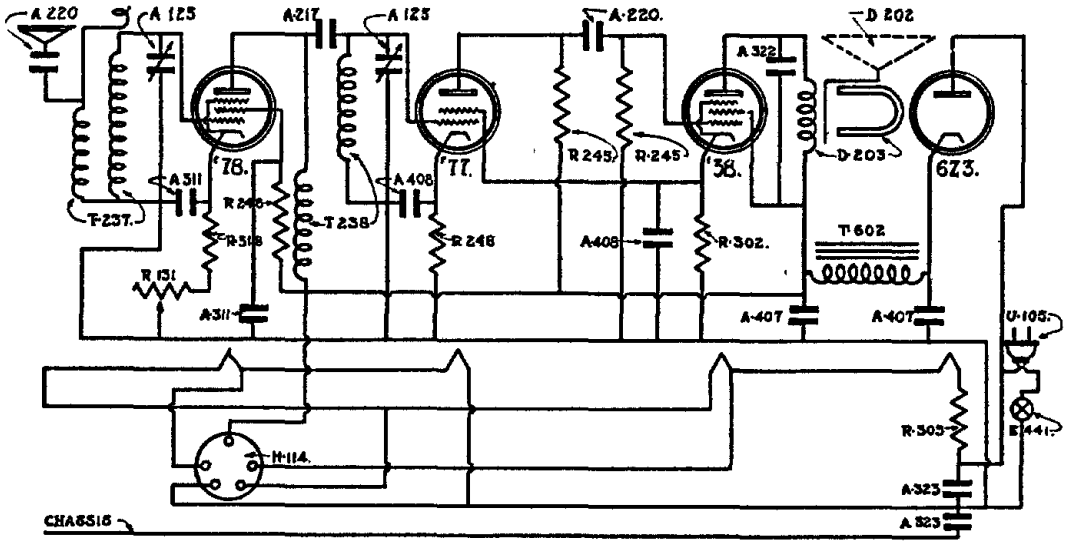

The out-put tube is now a "dome" type 38.

The new rectifier tube is 6Z3 and is interchangeable with the KR-1. The chief difference is that the new tube contains no mercury, and will therefore, be free from internal short circuits which have occurred occasionally in the KR-1 tube due to the condensation of mercury. The use of the new tube permits the elimination of the resistor R-304 in the plate circuit.

MODEL "P" SYMBOLS FOR SETS BEARING SERIAL NUMBERS 100,001 AND OVER

A-123	2-GANG VARIABLE CONDENSER	$1 75	A-408	DUAL 8 MFD BYPASS CONDENSER	.80
A-217	16 MMFD WIRE WOUND	10	D-202	SPEAKER CONE	48
A-220	.002 MFD MICA CONDENSER	.25	D-203	SPEAKER UNIT	1 50
A-311	.01 MFD BYPASS CONDENSER	15	E-441	POWER SWITCH	.30
A-322	.006 MFD CONDENSER	.15	H-114	AUTO PLUG	.60
A-323	05 MFD BYPASS CONDENSER	15	R-131	VOLUME CONTROL	60
A-407	FILTER CONDENSER	1.00	R-245	2 MEG CARBON RESISTOR	20

R-248	50M OHM CARBON RESISTOR	.20
R-302	1500 OHM WIRE WOUND RESISTOR	25
R-303	310 OHM WIRE WOUND RESISTOR	.75
R-318	150 OHM WIRE WOUND RESISTOR	.25
T-237	ANTENNA COIL ASSEMBLY	30
T-238	R F COIL ASSEMBLY	.35
T-602	FILTER CHOKE	.65

MODEL P--later production differs from earlier type as follows--uses types 77, 78 and 6Z3 tubes in place of types 36 and KR-1.

The type 78 is used in the R.F. stage. The screen voltage has been dropped on this tube through a 50M ohm resistor R-248 which is by-passed by an .01 Mfd. condenser A-311. The voltage on the screen is about 55 volts with the volume full on.
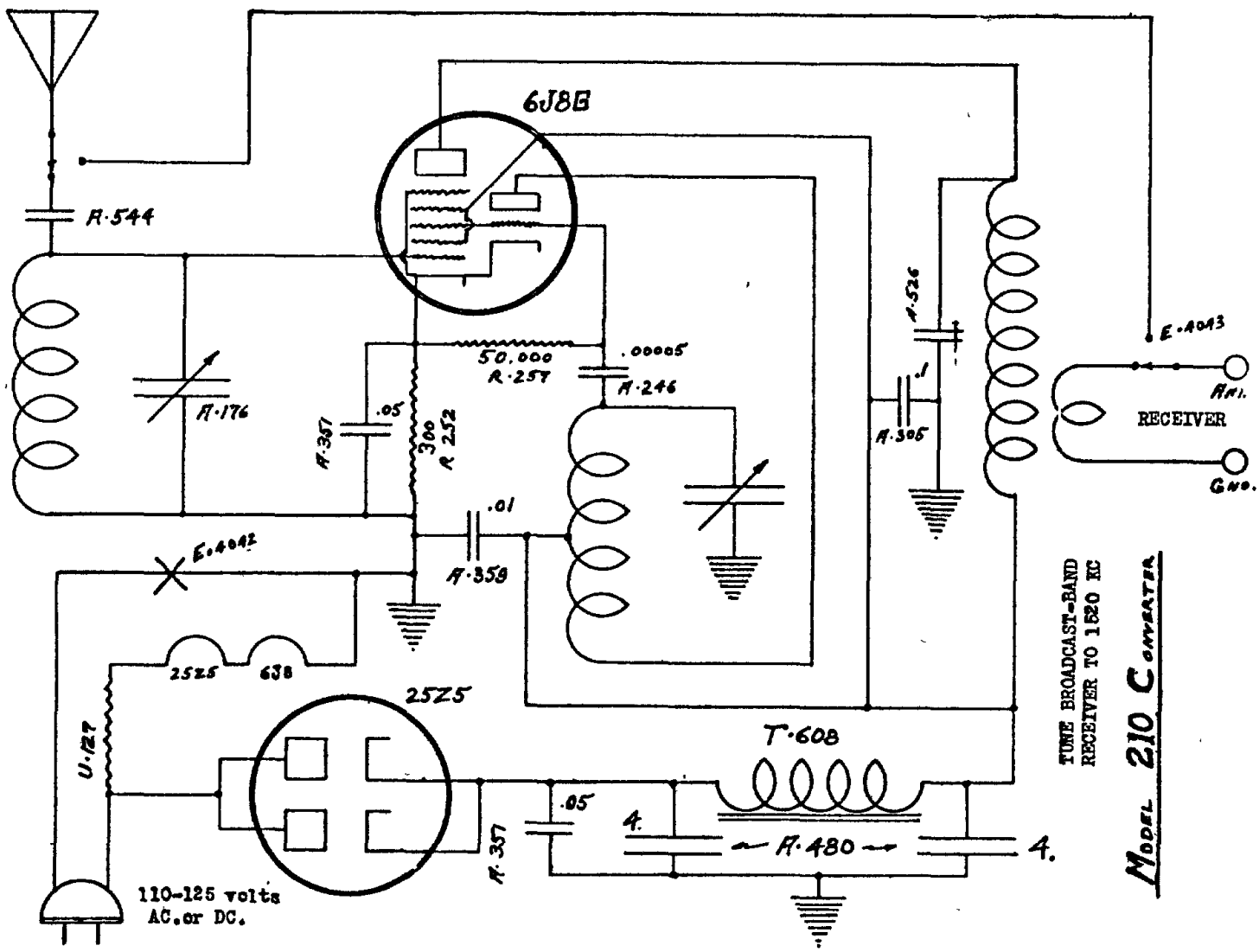
The voltages and connections to the detector socket are the same as in the earlier models. The tube is now a 77.