PARTS LIST

Symbol	Description
C-1	"FM" antenna trimmer
C-2	"FM" RF trimmer
C-3	"FM" Tuning condenser—RF
C-4	"FM" oscillator trimmer
C-5	"FM" tuning condenser—oscillator
C-6	47 mmf., mica capacitor
C-7	10 mmf., compensating capacitor
C-8	"BC" band mmf., RF trimmer
C-10	3000 mmf., mica capacitor
C-11	"SW" band RF trimmer
C-12	"AM" tuning condenser—RF
C-13	220 mmf., mica capacitor
C-14	.02 mfd., paper capacitor
C-15	.05 mfd., paper capacitor
C-16	47 mmf., mica capacitor
C-17	"B" Band trimmer
C-18	"AM" Tuning condenser—converter
C-19	"D" Band trimmer
C-20	3600 mmf., mica capacitor
C-21	.05 mfd., paper capacitor
C-22	"AM" Tuning condenser—oscillator
C-23	"D" band trimmer
C-24	"B" band trimmer
C-25	560 mmf., padder
C-26	65 mmf., compensating capacitor
C-27	.65 mfd., paper capacitor
C-28	.005 mfd., paper capacitor
C-29	"FM" Tuning condenser—converter
C-30	"FM" converter trimmer
C-31, -32	.02 mfd., paper capacitor
C-37, -38	.05 mfd., paper capacitor
C-40	.02 mfd., paper capacitor
C-41	.05 mfd., paper capacitor
C-42	.004 mfd., paper capacitor
C-43, -44, -45	.01 mfd., paper capacitor
C-46	.005 mfd., paper capacitor
C-47, -48, -49	100 mmf., mica capacitor
C-51	33 mmf., mica capacitor
C-54	47 mmf., mica capacitor
C-55	22 mmf., mica capacitor
C-56	.02 mfd., paper capacitor
C-57, -59	47 mmf., mica capacitor
C-61	8 mmf., compensating capacitor
C-62	220 mmf., mica capacitor
C-63	.01 mfd., paper capacitor
C-64	220 mmf., mica capacitor
C-65	100 mmf., mica capacitor
C-66	.01 mfd., paper capacitor
C-67, -68, -69	.65 mfd., paper capacitor
C-70	.005 mfd., paper capacitor
C-71, -72	.002 mfd., paper capacitor
C-73a	35 mfd., dry electrolytic
C-73b	15 mfd., dry electrolytic
C-73c	10 mfd., dry electrolytic
C-73d	20 mfd., dry electrolytic
C-74	.05 mfd., paper capacitor
C-75	"FM" RF padder
C-76	"FM" Oscillator padder
C-77	"FM" Converter padder
C-78	270 mmf., mica capacitor
C-79	65 mmf., compensating capac
R-1	1.5 megohm, carbon resistor
R-2	3,900 ohm, carbon resistor
R-3	100,000 ohm, carbon resistor
R-4	33,000 ohm, carbon resistor
R-5, -6	2,200 ohm, carbon resistor
R-7	33,000 ohm, carbon resistor
R-8	330 ohm, carbon resistor
R-9	1,200 ohm, carbon resistor
R-10	10,000 ohm, carbon resistor
R-11	2,200 ohm, carbon resistor
R-12	22,000 ohm, carbon resistor
R-13	1.5 megohm, carbon resistor
R-14	330 ohm, carbon resistor
R-15	15,000 ohm, carbon resistor
R-16	2,200 ohm, carbon resistor
R-17	2.2 megohm, carbon resistor
R-18	150,000 ohm, carbon resistor
R-19	100,000 ohm, carbon resistor
R-20	220,000 ohm, carbon resistor
R-21	8,200 ohm, carbon resistor
R-22	180,000 ohm, carbon resistor
R-23, -24	47,000 ohm, carbon resistor
R-26	6.8 megohm, carbon resistor
R-27	2 megohm, volume control
R-28	68,000 ohm, carbon resistor
R-29	22 ohm, carbon resistor
R-30	470 ohm, carbon resistor
R-31	2.2 megohm, carbon resistor
R-32	1.0 megohm, carbon resistor
R-33	10,000 ohm, carbon resistor
R-34	68,000 ohm, carbon resistor
R-35	22,000 ohm, carbon resistor
R-36	68,000 ohm, carbon resistor
R-37, -38	100,000 ohm, carbon resistor
R-39	3,900 ohm, carbon resistor
R-40	470,000 ohm, carbon resistor
R-41, -42	82,000 ohm, carbon resistor
R-43	220,000 ohm, carbon resistor
R-44	0.5 megohm treble-tone control
R-46	2,500 ohm, wire wound resistor
R-47	1,000 ohm, carbon resistor
R-48	220,000 ohm, carbon resistor
R-49	270 ohm, carbon resistor
R-50	220,000 ohm, carbon resistor
R-51	1,000 ohm, carbon resistor
R-52	8,200 ohm, carbon resistor
R-55	100,000 ohm, carbon resistor
R-56	47,000 ohm, carbon resistor
R-57	220,000 ohm, carbon resistor
R-68	820,000 ohm, carbon resistor

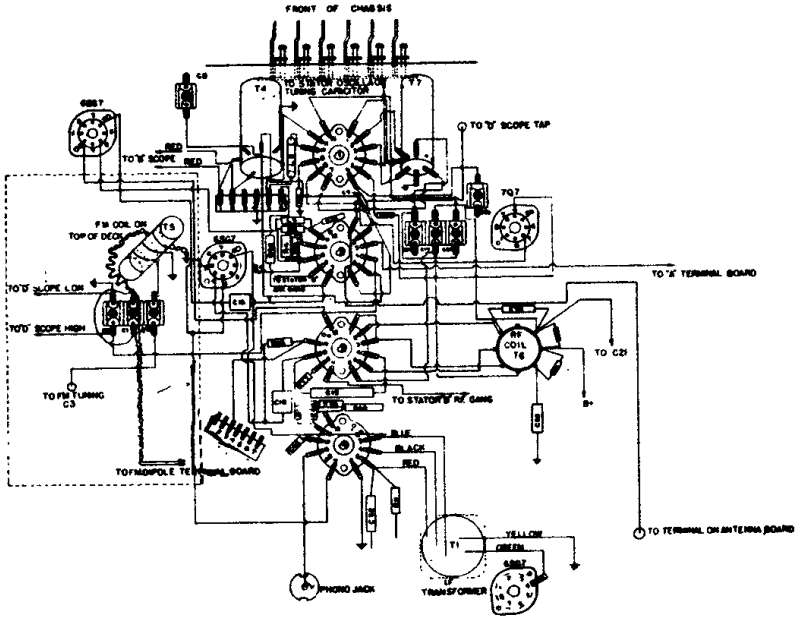

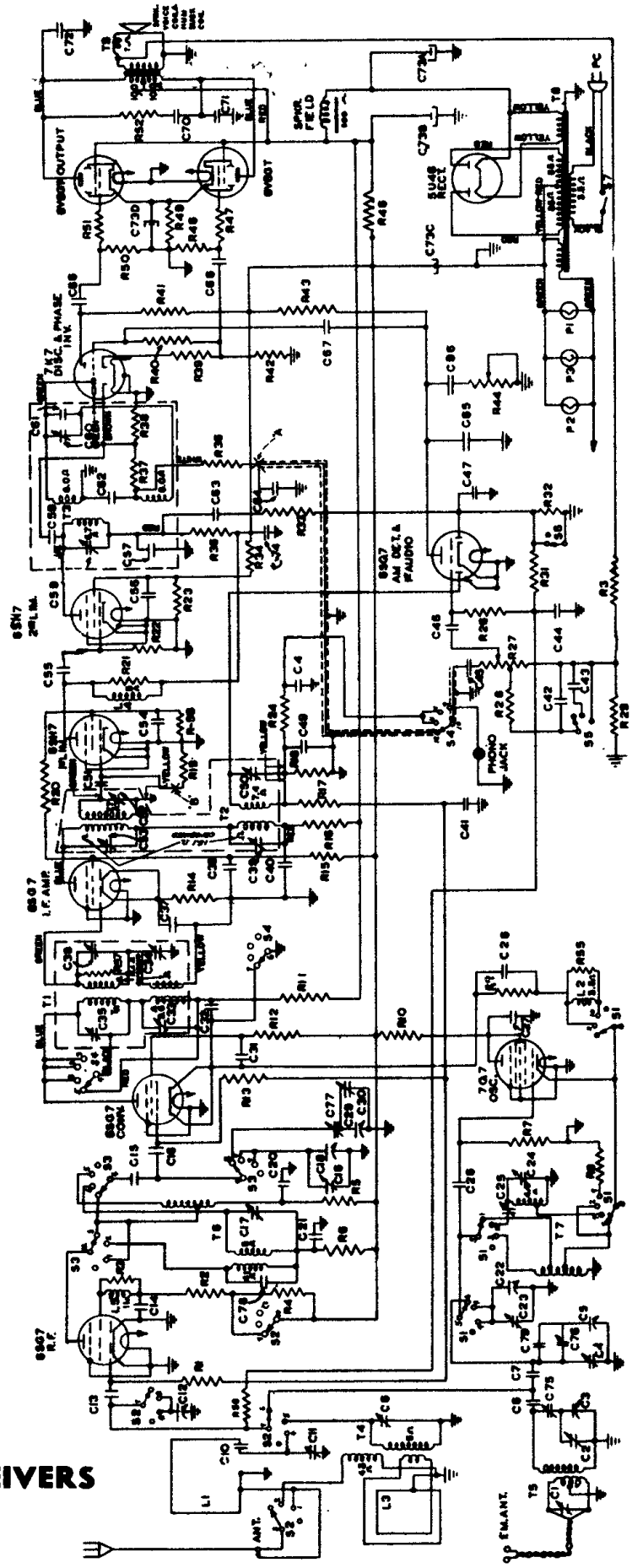

GENERAL ELECTRIC

A-FM COMBINATION RECEIVERS
Models LF-115 & LF-116 AND
A-FM PHONOGRAPH COMBINATION RECEIVERS