HOWARD RADIO CO.
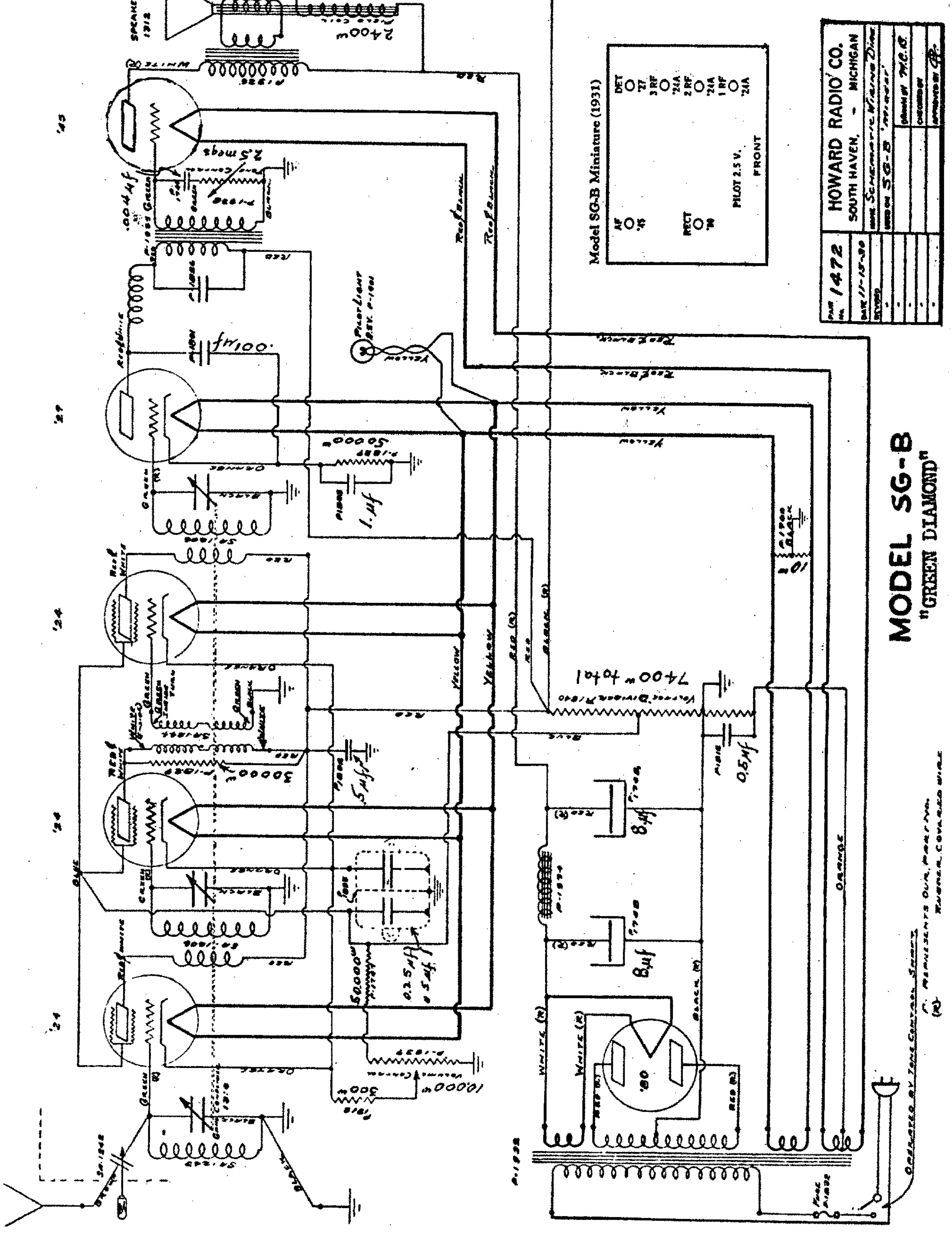
MODEL Miniature
(SG-B)