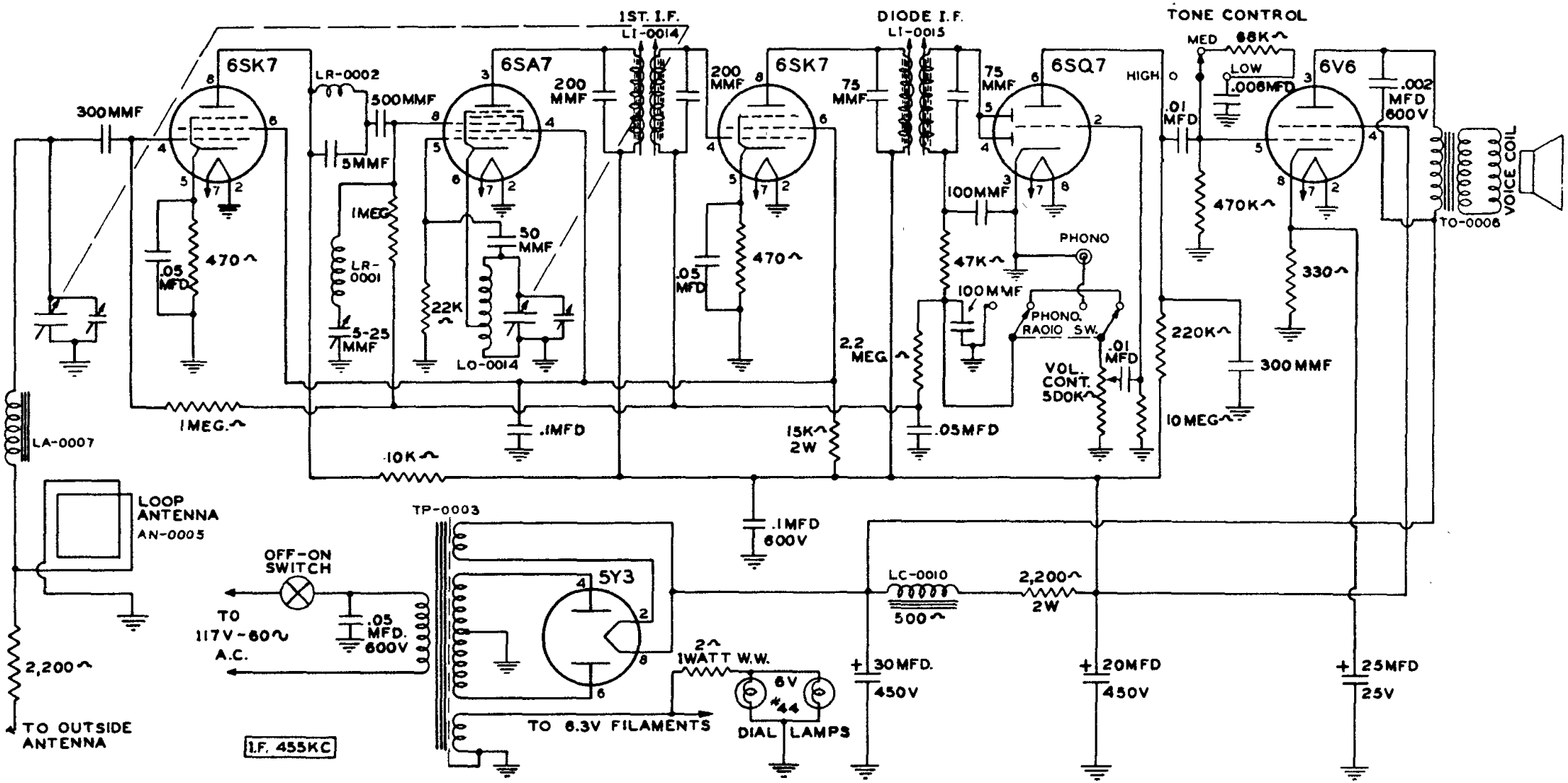

PHONO.-RADIO SWITCH SHOWN IN RADIO POSITION.

HOWARD RADIO COMPANY

MODEL No. 906

Voltage measurements from ground using vacuum tube voltmeter.

Tube	Use	Cath.	S.G.	Plate	B+
6SK7	R.F.	1.8	79	210	
6SA7	Converter		79	230	
6SK7	I.F.	2.3	79	240	
6SQ7	Det.			115	
6V6	Out.	11	235	225	
5Y3				AC	285