OLYMPIC RADIO & TELEVISION

Model 6-507

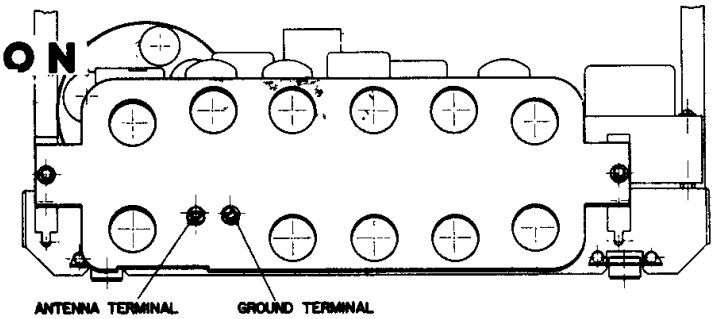

REAR VIEW OF RECEIVER CHASSIS WITH CABINET BACK REMOVED

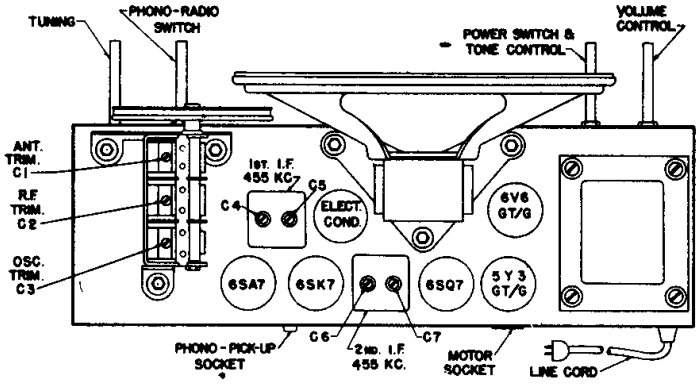

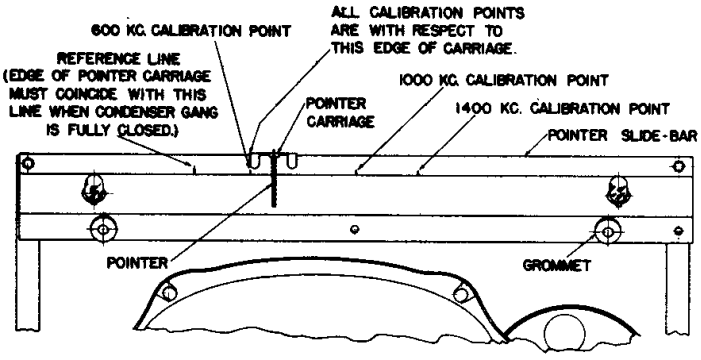

FRONT VIEW OF DIAL BACK-PLATE SHOWING CALIBRATION POINTS

ALIGNMENT PROCEDURE CHART
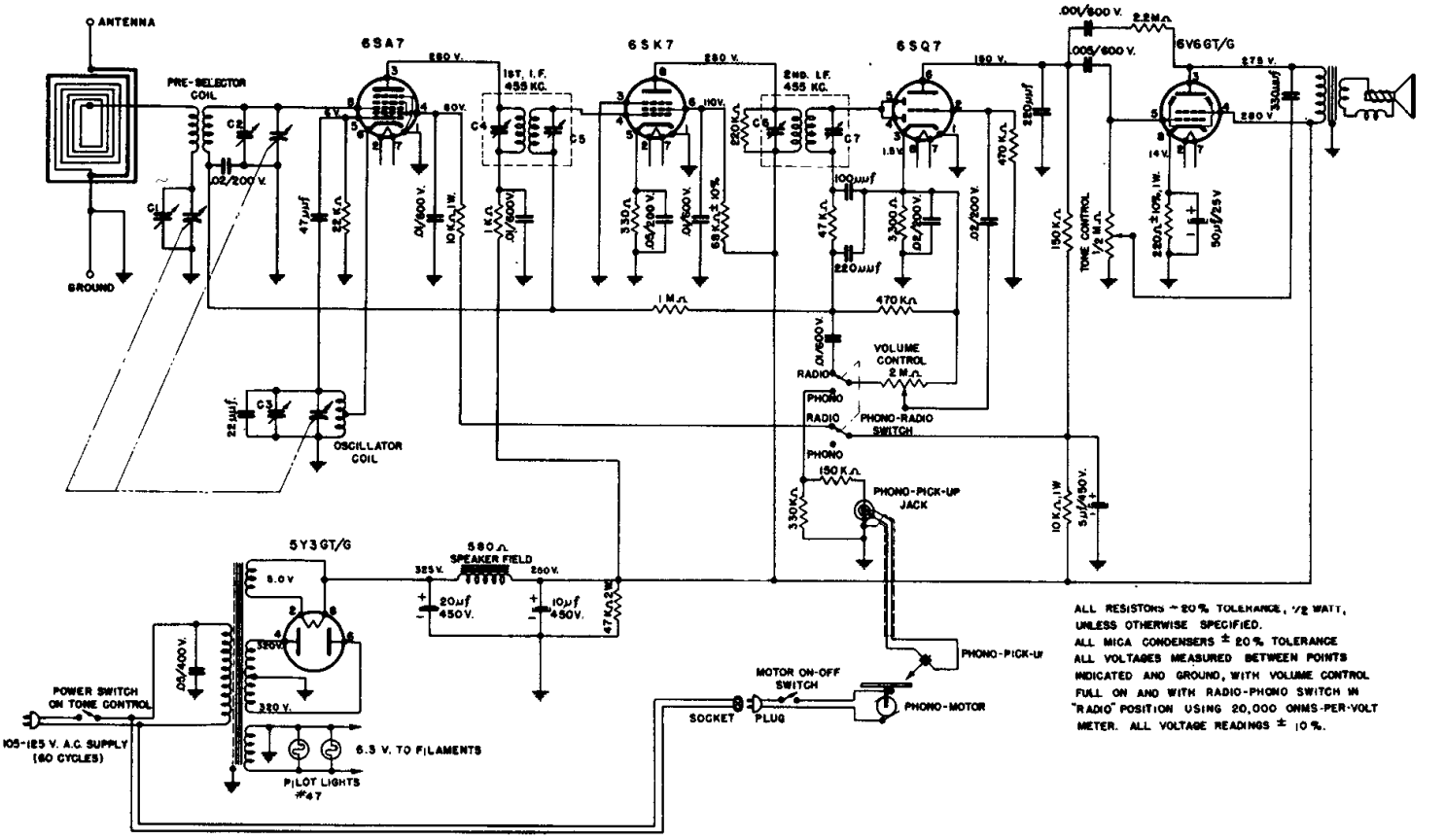
STEP	CONNECT HIGH SIDE OF SIGNAL GENERATOR TO-	SET SIGNAL GENERATOR TO-	TURN POINTER TO-	ADJUST THE FOLLOWING FOR MAXIMUM OUTPUT. (KEEP SIGNAL FROM SIGNAL GENERATOR AS LOW AS POSSIBLE.)
1	R.F. SECTION OF THE VARIABLE CONDENSER.	455 KC.	EXTREME RIGHTHAND POSITION. (CONDENSER PLATES FULLY OPEN.)	C7, C6, C5, C4 AND REPEAT IN SAME ORDER (1ST. AND 2ND. I.F. TRANSFORMERS.)
2	ANTENNA TERMINAL OF ANTENNA LOOP IN SERIES WITH 50 MMFD. COND.	1400 KC.	1400 KC. CALIBRATION POINT.	C3, C2, C1.
3		600 KC.	RESONANCE	CHECK THAT POINTER EDGE AT RESONANCE COINCIDES WITH 600 KC. CALIBRATION POINT. IF DEVIATION IS TOO LARGE REPEAT STEP 2.