the hallicrafters co. MODEL S-38

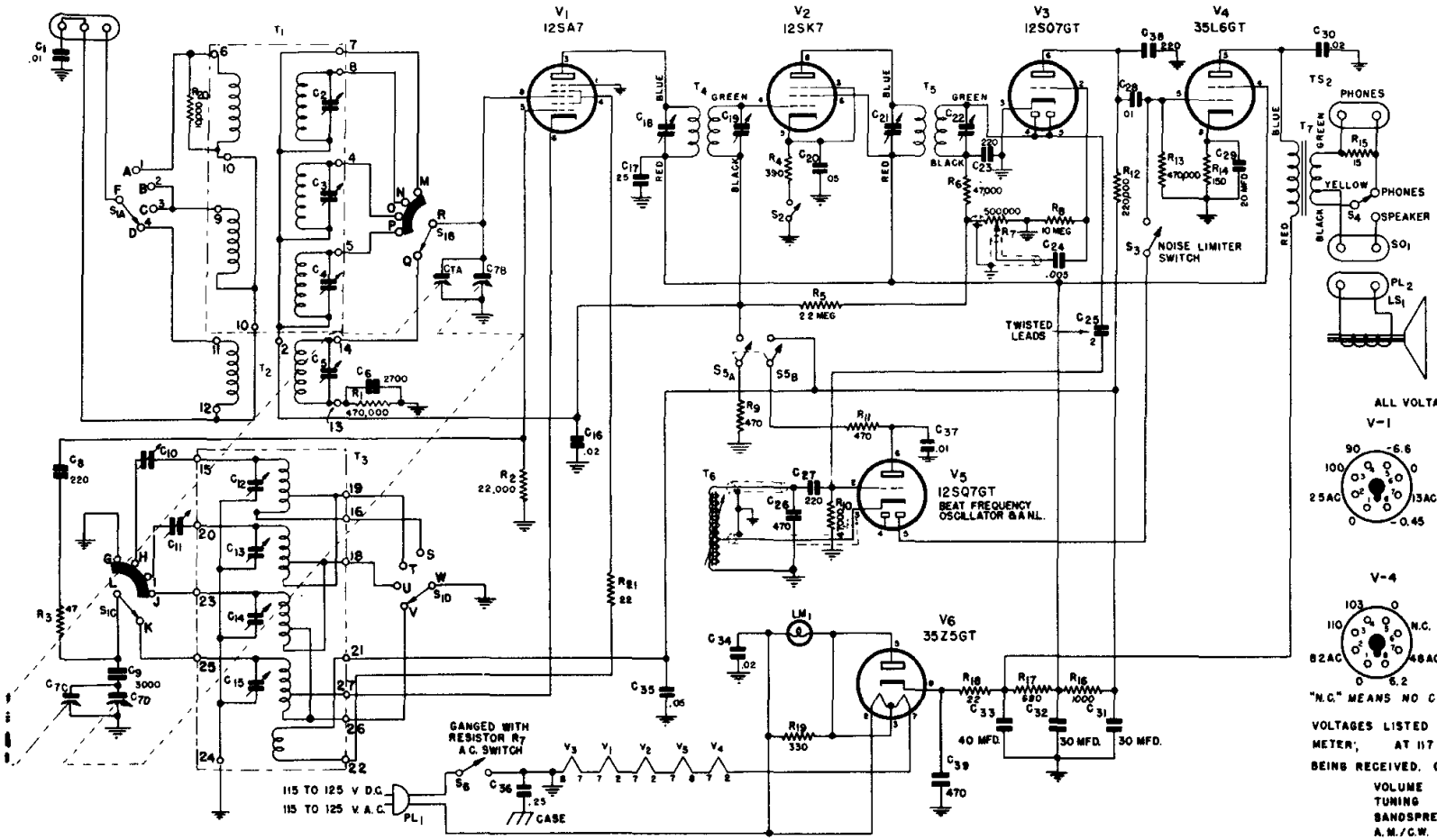

VOLTAGES AT TUBE TERMINALS

ALL VOLTAGES ARE DC UNLESS OTHERWISE SPECIFIED

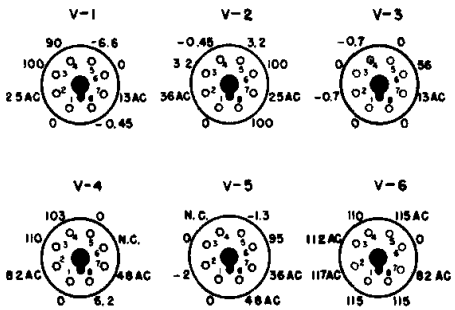

"N.C." MEANS NO CONNECTION.

VOLTAGES LISTED WERE TAKEN WITH AN ELECTRONIC VOLT METER, AT 117 V. A-C LINE VOLTAGE; NO SIGNAL BEING RECEIVED. CONTROLS SET AS FOLLOWS:

VOLUME	MAX. CLOCKWISE
TUNING	SET AT 550 KC
BANDSPREAD	SET AT 100
A.M./C.W.	SET AT "C.W."
RECEIVE/STANDBY	SET AT "RECEIVE"
NOISE LIMITER	SET AT "OFF"
BAND SELECTOR	SET AT "1"
SPEAKER/PHONES	SET AT "SPEAKER"

NOTE: RESISTANCE VALUES ARE IN OHMS; MICA CAPACITOR VALUES ARE IN MMF.; PAPER CAPACITOR VALUES ARE IN DECIMAL EQUIVALENTS OF MFD; ELECTROLYTIC CAPACITOR VALUES ARE IN MFD.

BANDSWITCH S1

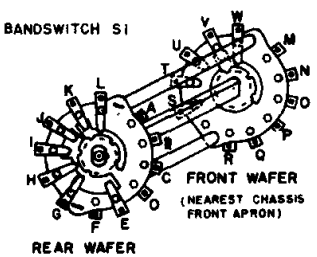

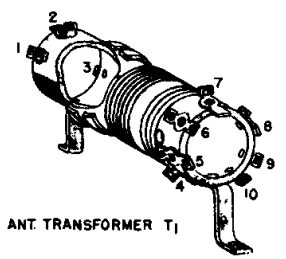

ANT. TRANSFORMER T1

ANT. TRANSFORMER T2

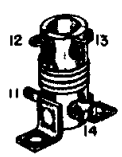

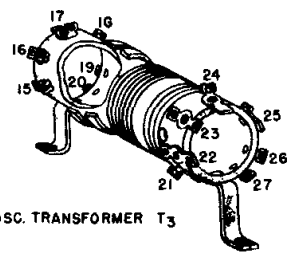

OSC. TRANSFORMER T3

- - - - DENOTES ELECTRICAL SHIELD.
— — — — DENOTES UNSHIELDED UNIT ASSEMBLY.
DENOTES MECHANICAL GANGING.

LETTERS AT BANDSWITCH (S1) AND NUMERALS AT ANTENNA AND OSCILLATOR TRANSFORMERS (T1, T2 & T3) IDENTIFY CORRESPONDING TERMINAL LUGS ON PICTORIAL VIEWS.

NOTE: DIMENSIONS & PROPORTIONS SHOWN IN PICTORIAL VIEWS HAVE BEEN EXAGGERATED FOR CLARITY OF TERMINAL LUG LOCATION.

DETAILED SERVICE INFORMATION

IF FREQUENCY	IF SELECTIVITY	IMAGE RATIO	SENSITIVITY	AUDIO OUTPUT
455 kc	7 kc wide at 6 db down 65 kc wide at 60 db down (for 50 milliwatt output)	2.7:1 at 30 mc 6:1 at 14 mc 10:1 at 5 mc 35:1 at 1500 kc	12 microvolt at 600 kc 12 microvolt at 5 mc 11 microvolt at 14 mc 23 microvolt at 30 mc (for 50 milliwatt output)	675 milliwatt with less than 10% distortion at 400 cycles