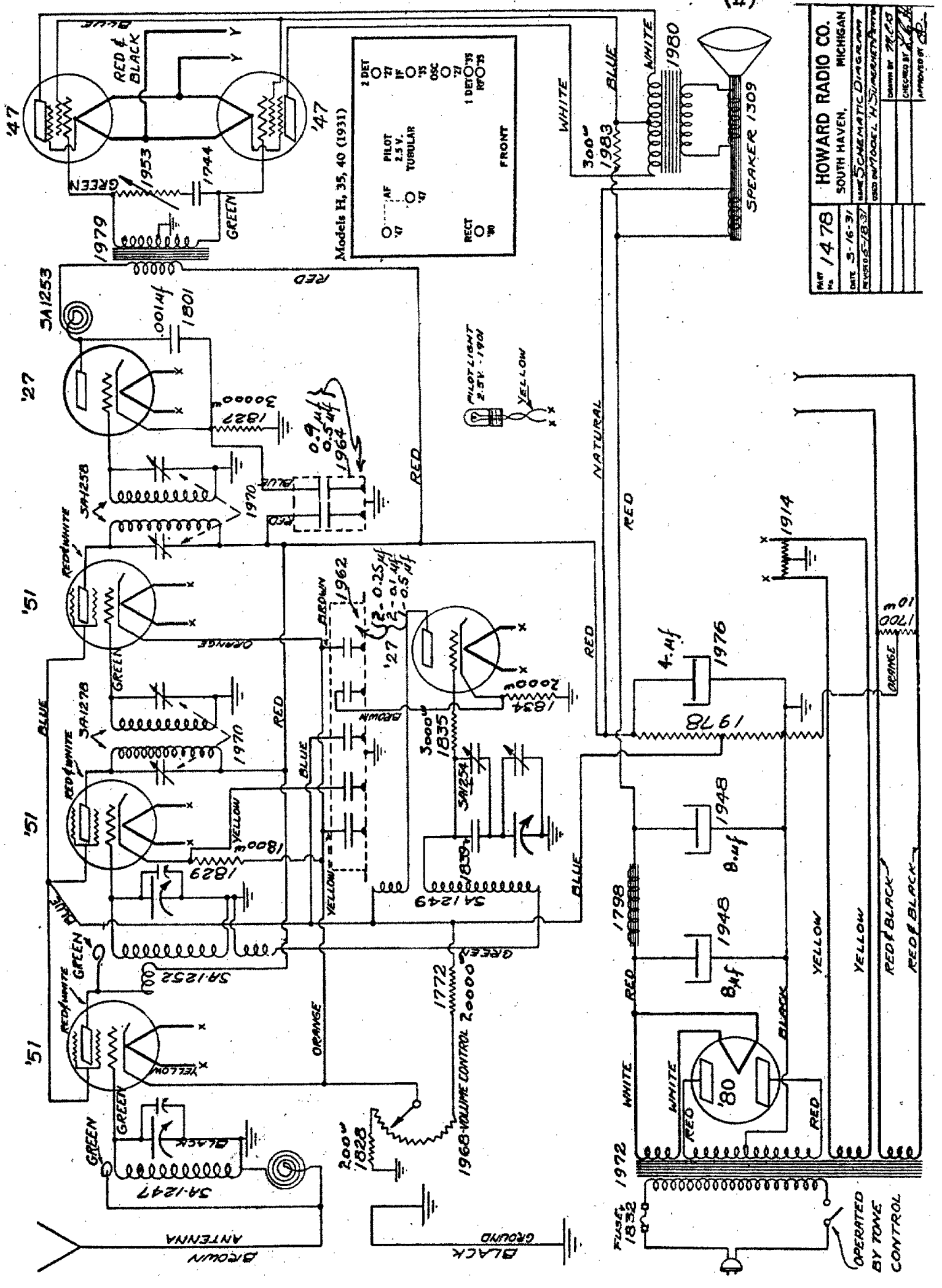HOWARD RADIO CO. MODEL 35,40 (H)