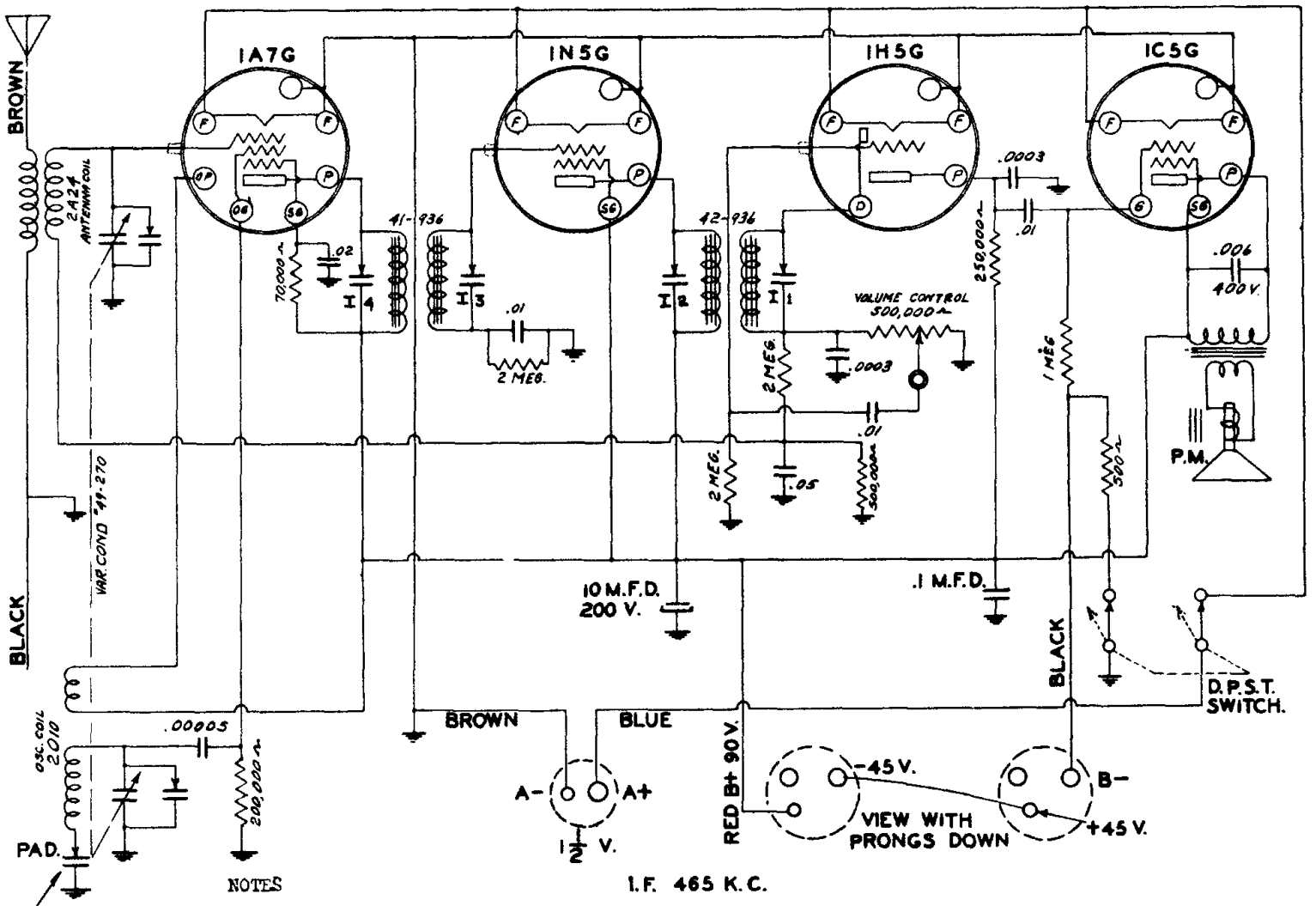

NOTES

When adjusting this pad, move the tuning hand back and forth and adjust padder until the peak of greatest intensity is obtained.

HOWARD RADIO CO.
MODEL 12-B

SERVICE NOTES

It is necessary that the IN5G tube be shielded. See that the shield is firmly in place around the bottom portion of the tube.

The intermediate frequency of this receiver is 465 KC.

The trimmers and padding condenser adjustments are accessible through bottom of cabinet.

Color code of battery leads:- Red B+90; Black B-; Brown A-; Blue A + 1½ V.

RECOMMEND BATTERY KITS

	EVEREADY	BURGESS	For greater economy use two "A" cells in PARALLEL. Connect plus to plus and minus to minus.
1½ V. "A" 1 Required	740	20-F	
45 V. "B" 2 Required	749	D60	
Combination "A" and "B" Single Unit.	746	17GD60	Use Adapter

Each step of the alignment should be repeated in the original order for greater accuracy. Keep output from Signal Generator low. The I.F. trimmers are reached through the two holes on the top of each I.F. can.

See that the tuning hand is set exactly on the last line above 540 when the condenser is at maximum capacity.
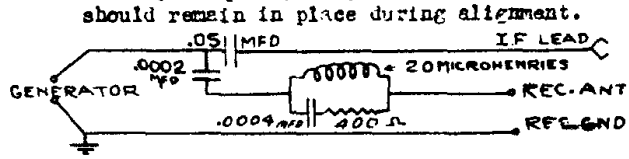
The following dummy antenna circuit is recommended, since it is adaptable for any frequency range. The grid cap should remain in place during alignment.