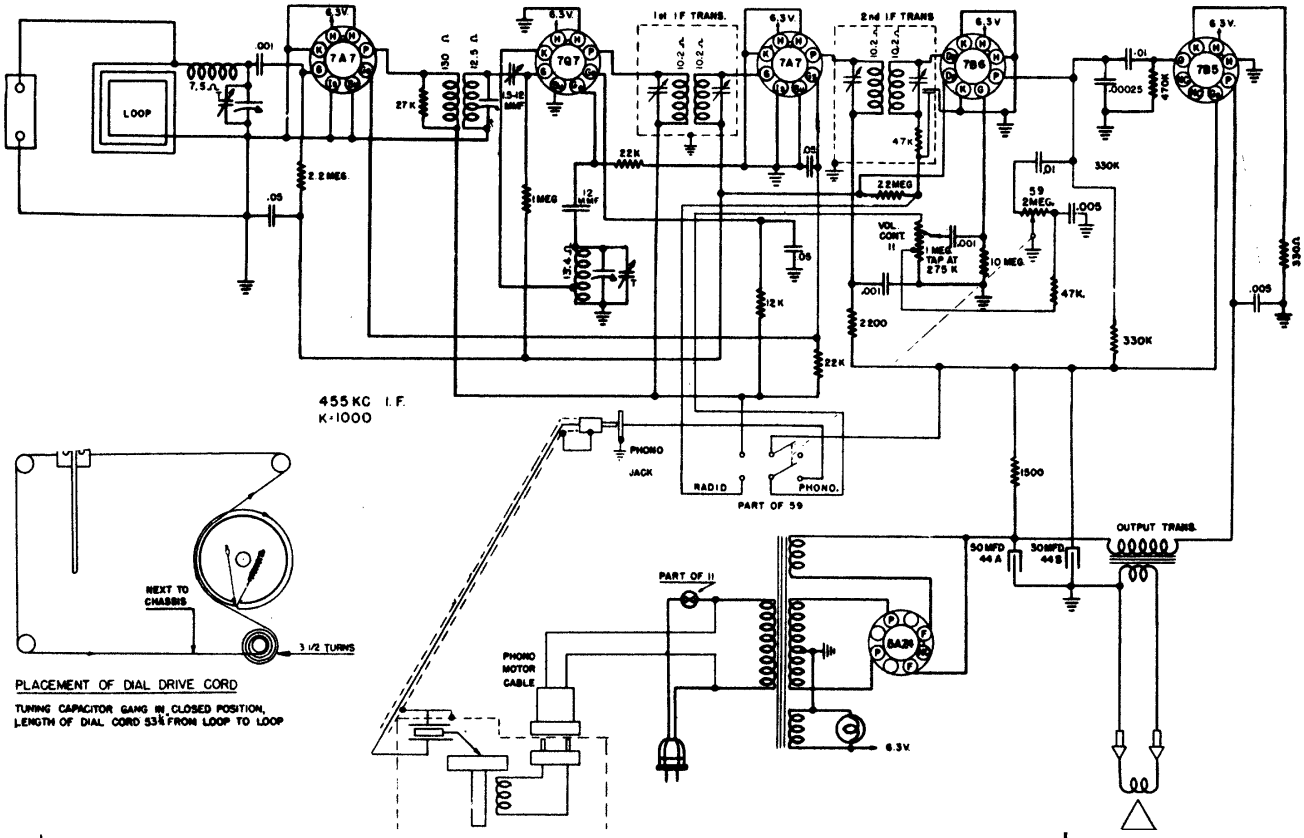

PLACEMENT OF DIAL DRIVE CORD

TUNING CAPACITOR GANG IN CLOSED POSITION, LENGTH OF DIAL CORD 53¾ FROM LOOP TO LOOP

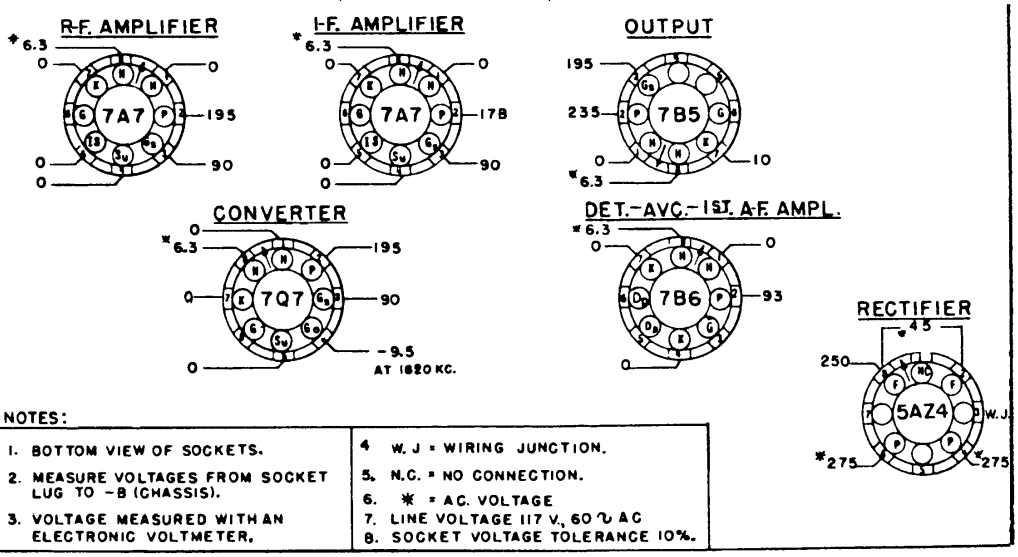

NOTES:

1. BOTTOM VIEW OF SOCKETS.
2. MEASURE VOLTAGES FROM SOCKET LUG TO -B (CHASSIS).
3. VOLTAGE MEASURED WITH AN ELECTRONIC VOLTMETER.
4. W. J = WIRING JUNCTION.
5. N.C. = NO CONNECTION.
6. * = AC. VOLTAGE
7. LINE VOLTAGE 117 V., 60 ∿ AC
8. SOCKET VOLTAGE TOLERANCE 10%.

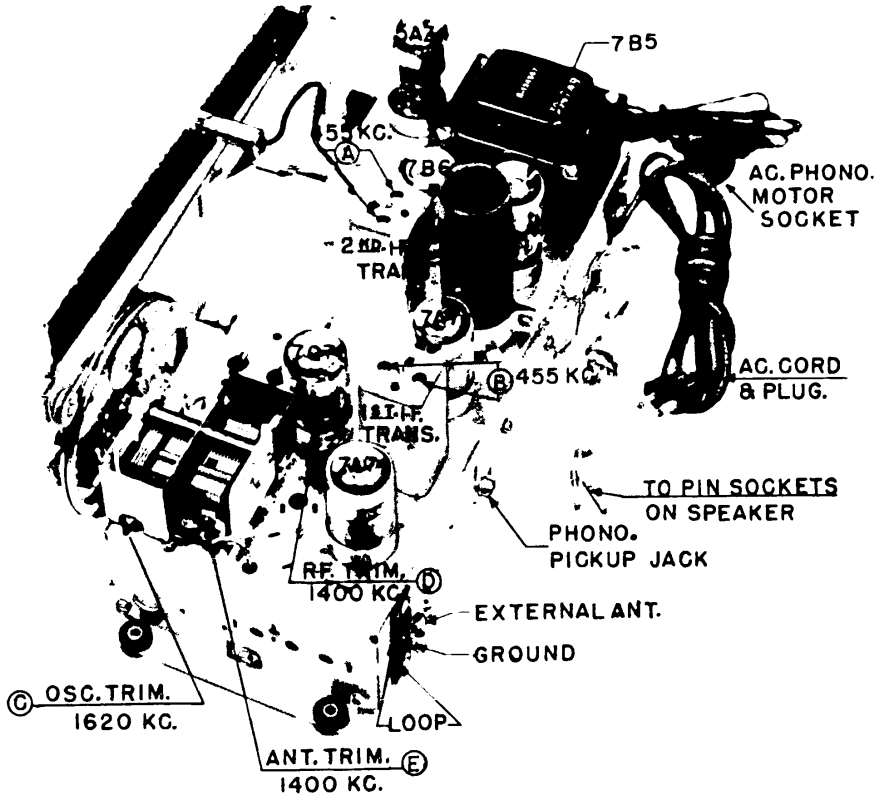

CROSLEY

MODELS 9-209, 9-212M