CROSLEY

MODELS 9-119, 9-120W

9-119

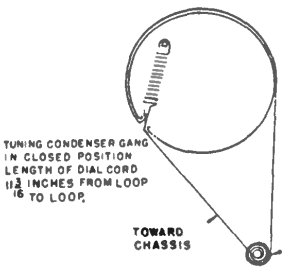

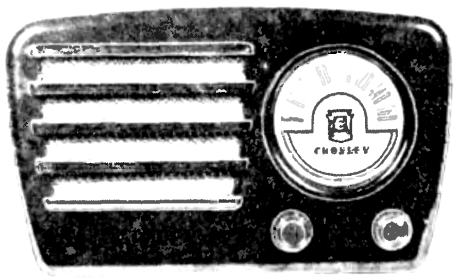

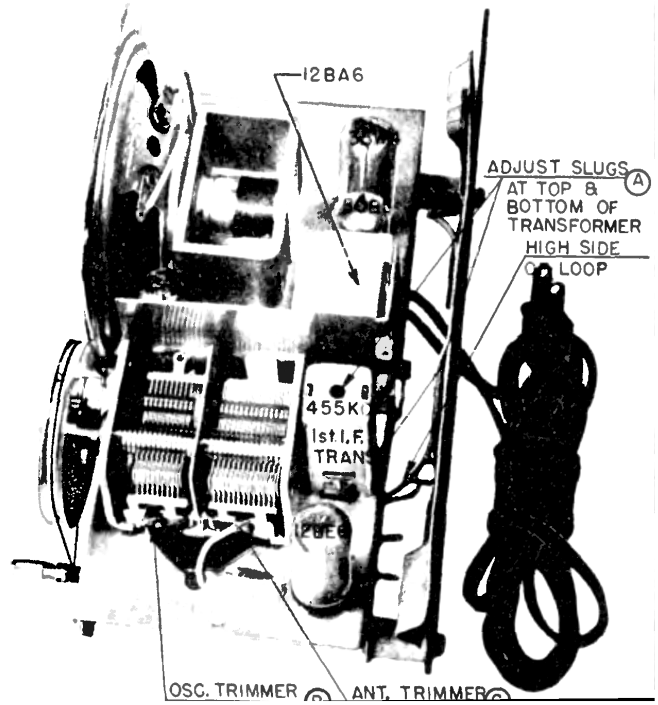

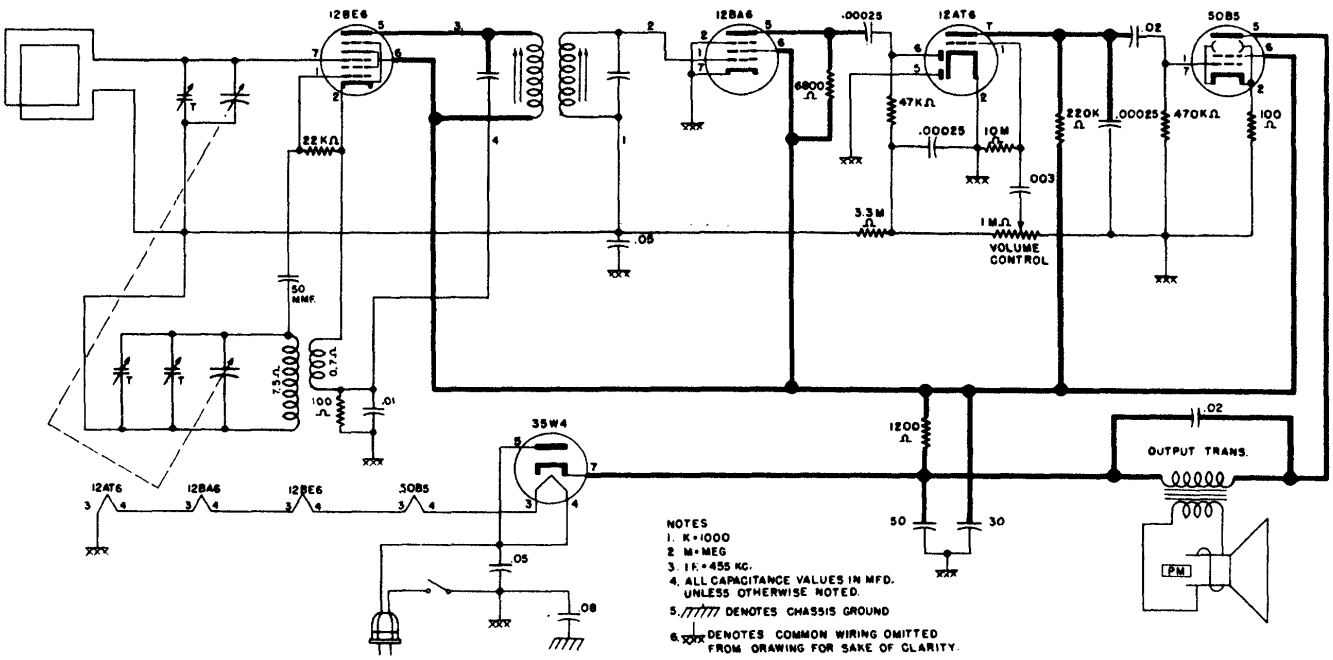

ALIGNMENT PROCEDURE

1. Connect an output meter across the speaker voice coil.
2. The r.f. signal input from the signal generator should be connected to the high side of loop antenna. Connect the signal generator ground through a 0.1 mfd. condenser to B— (pin 2 on 12BA6 tube socket).
3. Turn the volume control on full and adjust the signal generator output to produce approximately midscale deflection of the output meter, but maintain signal generator output as low as possible to prevent AVC action in the receiver.

Alignment Sequence	Signal Generator Output			Position of Dial Pointer	Adjust for Maximum Output
	Frequency in kc.	In Series with	To		
1	455	200 mmf.	High Side of Loop	1620	A
2	1620	*Radiated to Loop		1620	B
3	1400	*Radiated to Loop		1400	C