CROSLEY RADIO CORP.

MODEL 7
MODEL 7-1

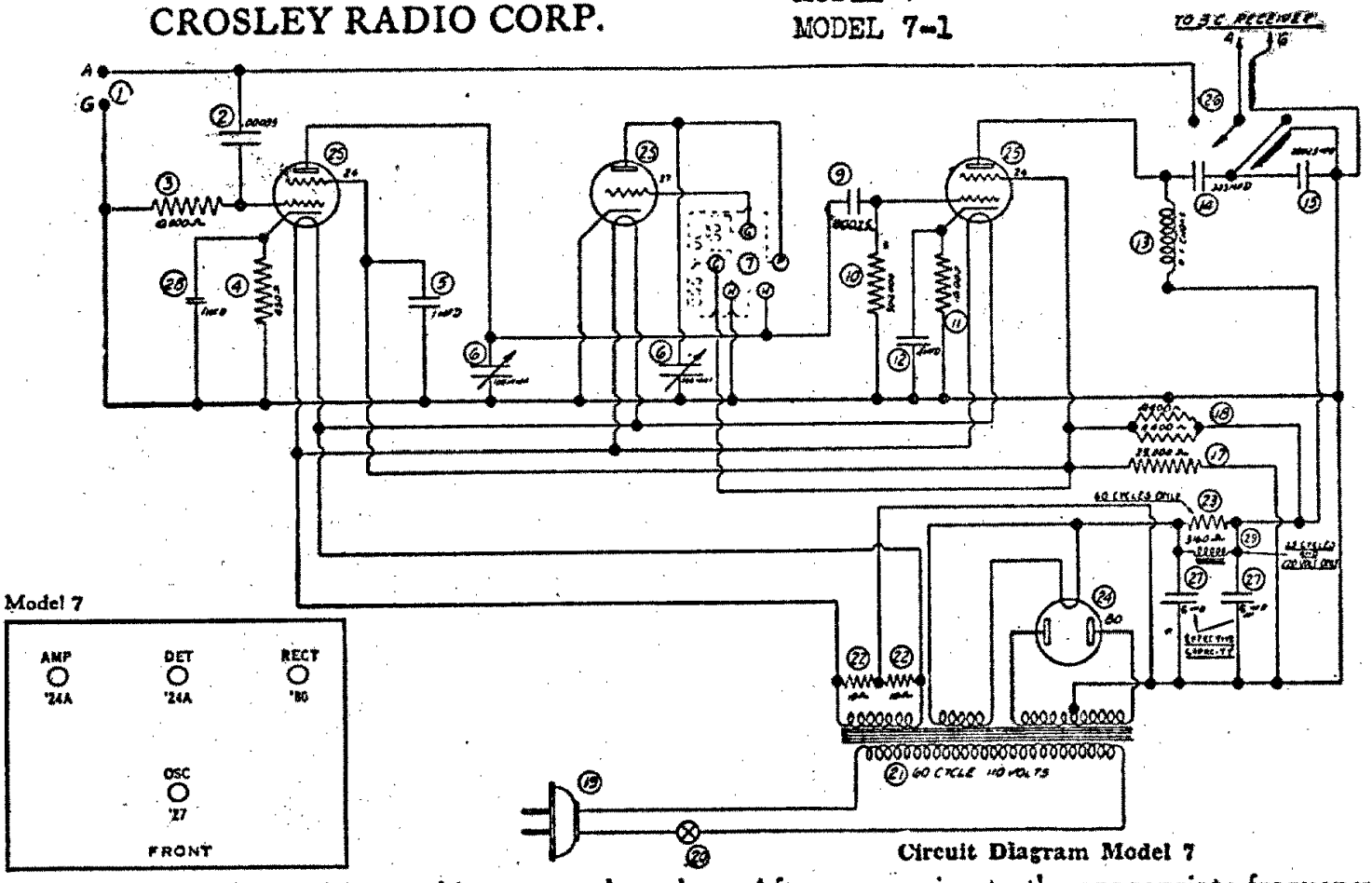

Circuit Diagram Model 7

This is a chassis for attaching to any broadcast receiver in order to adapt the latter to the reception of short-wave signals. It is of the superheterodyne type, the incoming signal being converted to a frequency within the regular broadcast range by the use of an oscillator and detector (see Service Bulletin No. A-1 for an explanation of the superheterodyne receiver). After conversion to the appropriate frequency the signal is delivered to the aerial and ground terminals of the broadcast receiver.

The chassis incorporates a -24 type, untuned buffer amplifier, a -27 tuned oscillator, a -24 tuned detector, and a -80 rectifier. Various frequency ranges are obtainable by the use of suitable coils, as explained in the instructions accompanying the chasses.

Model 7-1

Model 7-1 is a short-wave converter similar in general operation to Model 7, which has been described previously, but incorporating one less tube and having a tuned antenna circuit.

The tubes are as follows: a -24 first detector, a -27 oscillator, and a -80 rectifier.

Model 7-1

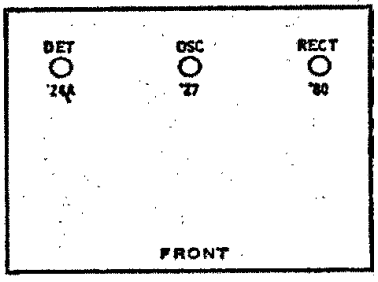

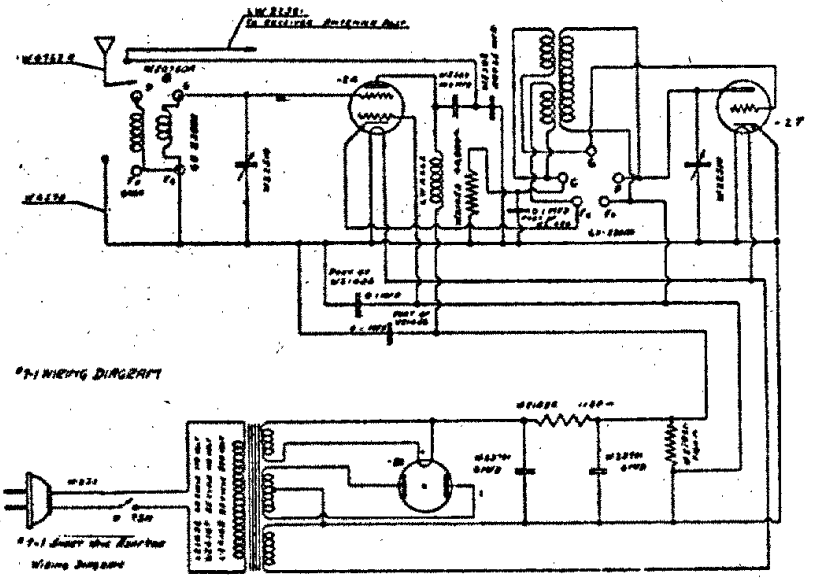

Circuit Diagram. Model 7-1