ARVIN RADIOS, MODELS 450T AND 451T
CHASSIS RE-281, 5 TUBE AC-DC

FREQUENCY RANGE
Broadcast ..... 540-1600 kc
IF ..... 455 kc

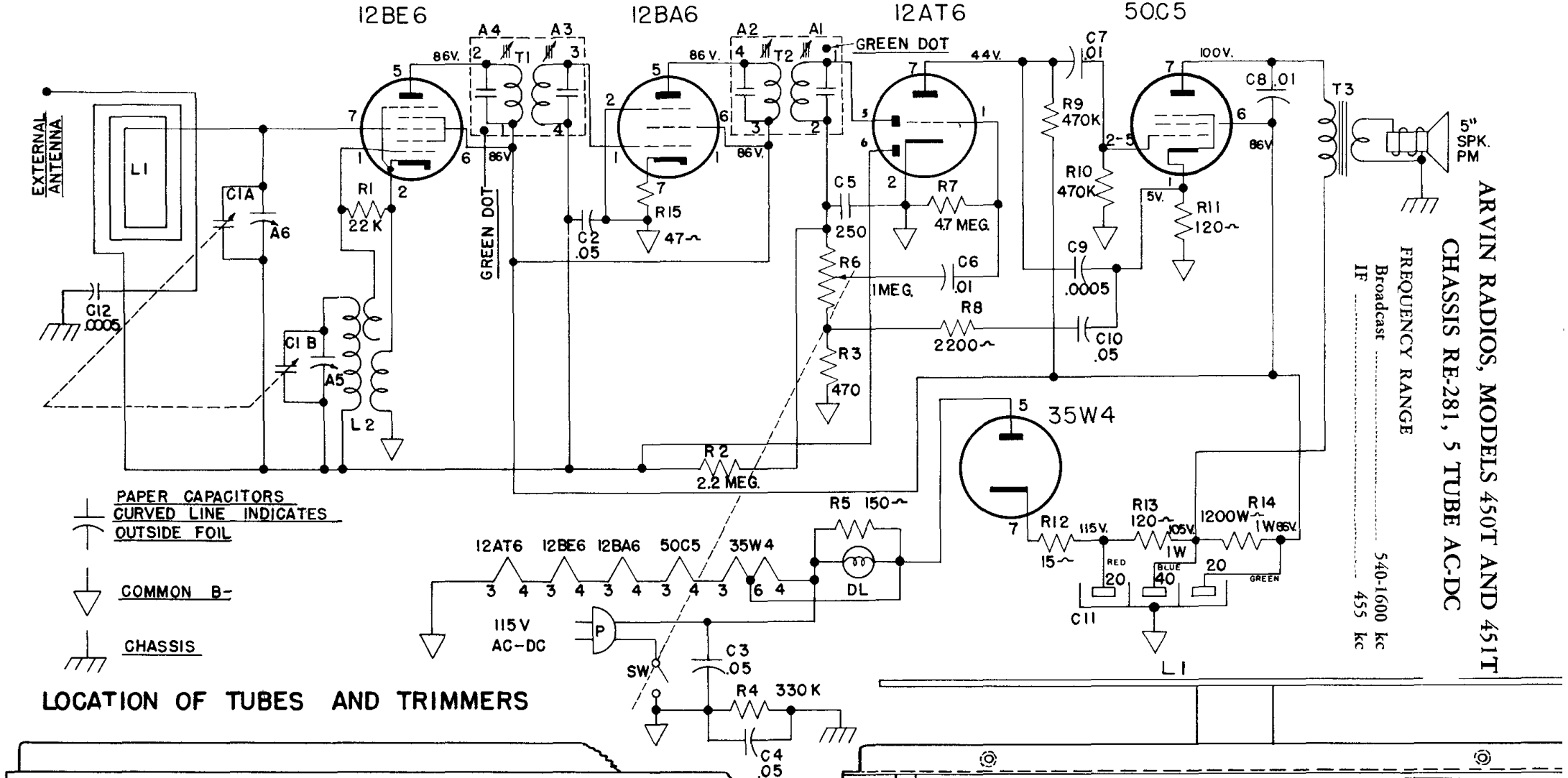

LOCATION OF TUBES AND TRIMMERS

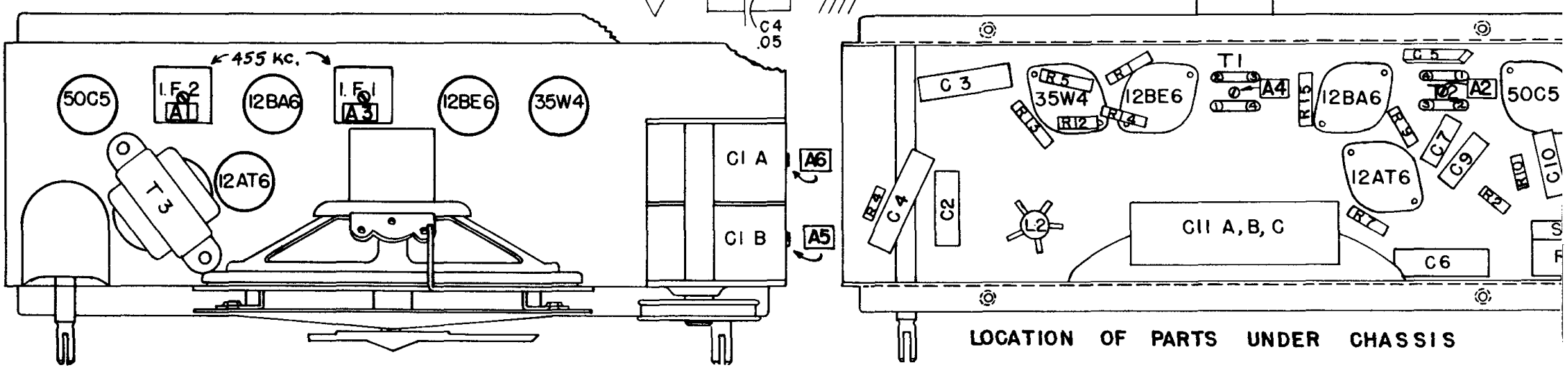

LOCATION OF PARTS UNDER CHASSIS