# ARVIN MODELS 10R32 10R38 10R39 CHASSIS 1. 49801

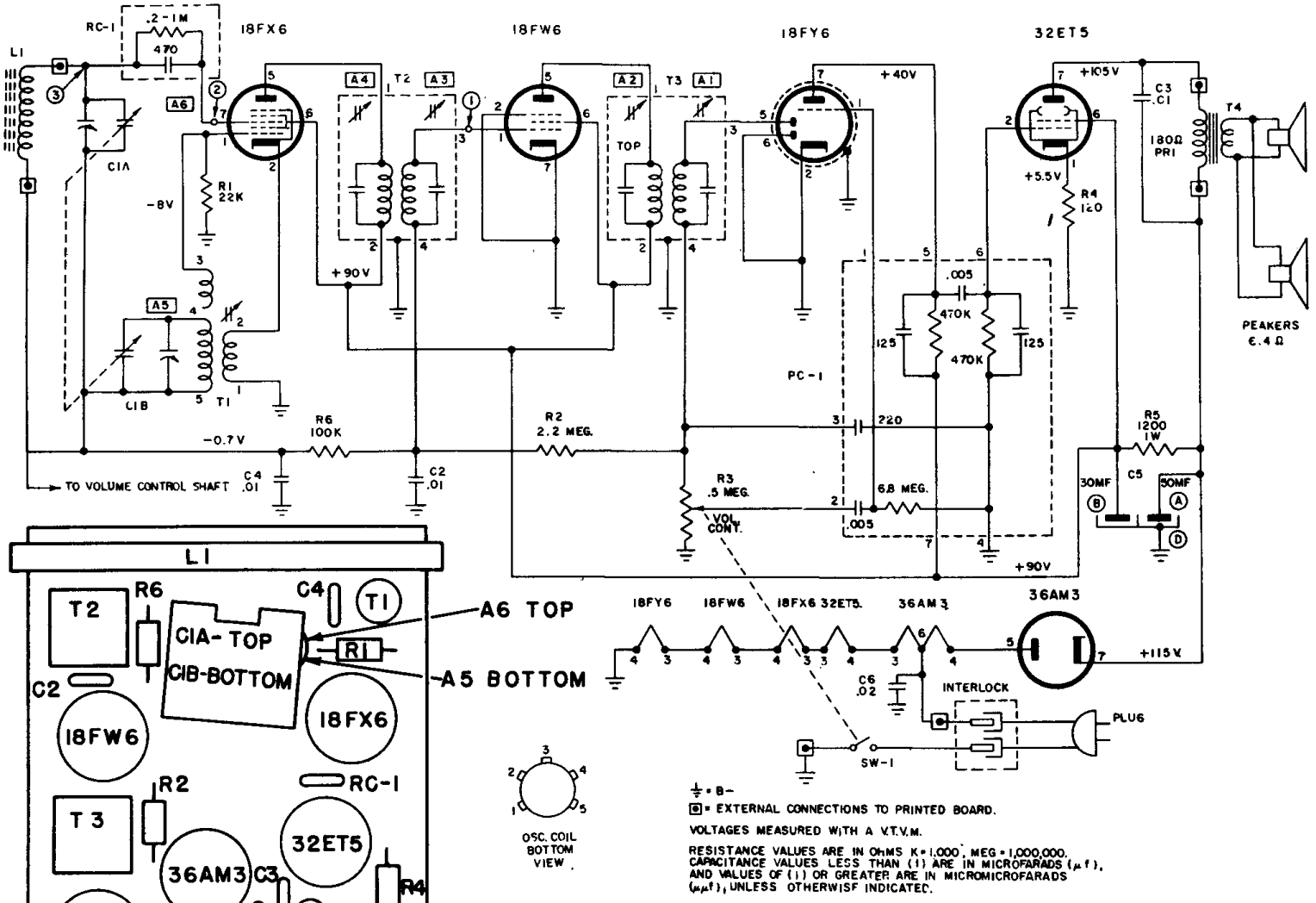


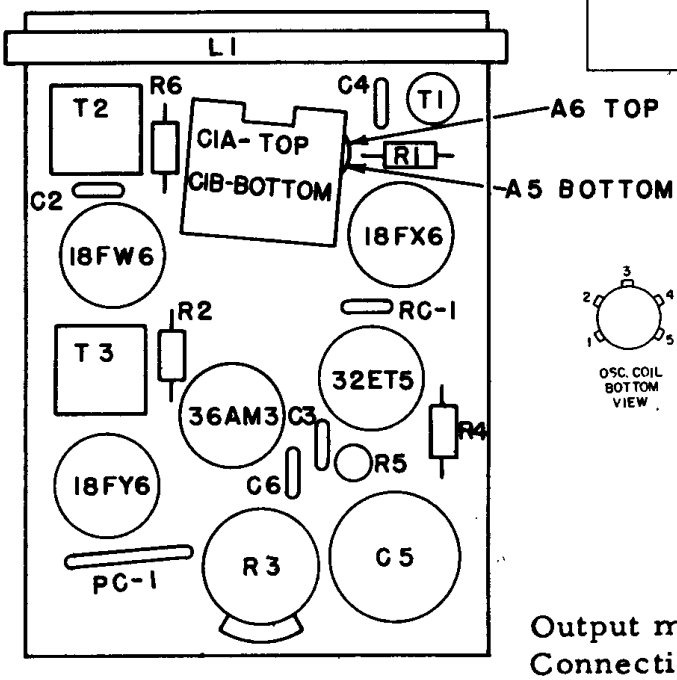


## ALIGNMENT PROCEDURE

Output meter connection . . . Across speaker voice coil
Connection of generator ground lead . . Floating ground
Generator modulation . . . . . 30% 400 cycles
Position of Volume Control. . . . . Fully clockwise

| Position of Variable | Frequency of Generator | Dummy Antenna | Generator Output Connection | Trimmers Adjusted in Order Shown for Maximum Output | Function of Trimmer |
|---|---|---|---|---|---|
| Open | 455 Kc | .05 μ fd | Pin 7 18FX6 | A1, A2, A3, A4 | I.F. |
| Open | 1670 Kc | | * Test Loop | A5 | Oscillator |
| 1400 | 1400 Kc | | * Test Loop | A6 | Antenna |
| 1000 | 1000 Kc | | * Test Loop | Fan C1A Plates | |
| 600. | 600 Kc | | * Test Loop | Fan C1A Plates | |

* Standard Hazeltine Test Loop Model 1150 or 3 turns of wire about 6" in diameter placed about one foot from the set loop.

The alignment procedure should be repeated in the original order, for greatest accuracy. Always keep the output from the signal generator at its lowest possible value to make the AVC action of the receiver ineffective.